MC

MC
SLIDE

TECHNOLOGY FOR
SLIDING GLASS
SYSTEMS

General Catalogue



Printer

Grafiche Antiga spa stampato con il sole

Mc-Slide S.r.l.
Via Achille Grandi, 29 - 47922 Rimini (RN)
P.I. 03886680408 - SDI: M5UXCR1
T. +39 0541 734619
www.mcslide.it | info@mcslide.it


MC
MC
SLIDE

CONTENTS

Mc Slide

The Company 8
SALES NETWORK, B2B PROJECTS, OUR CLIENTS

VD Slide 14
VISTADESIGNER, CONFIGURATOR SOFTWARE

3D Architectural Project 16
ALL OUR SYSTEMS IN FLOOR PLANS AND RENDERS

Exterior Line

Technical Guidance 26
VEPA

Sliding Floor 28
ALL-GLASS SLIDING SYSTEM WITH ABS TECHNOLOGY

Libra | 4D UPGRADE 42
ALL-GLASS STACKING SYSTEM WITH BOTTOM-ROLLING TRACK

Starglass | 4D UPGRADE 52
ALL-GLASS STACKING SYSTEM WITH TOP-HUNG TRACK

Folding 64
ALL-GLASS BI-FOLD SYSTEM

Parking 80
ALL-GLASS STACKING SYSTEM WITH UNLIMITED PANELS

Interior Line

Technical Guidance 92
INTERIOR LINE

Fusion 94
FRAMED SLIDING DOOR SYSTEM

Maglev 104
ALL-GLASS MAGNETIC-LEVITATION SLIDING DOOR SYSTEM

Frontal 112
SYNCHRONIZED SLIDING DOOR SYSTEM AND PARTITION WALL PROFILES

Pratik 122
TELESCOPIC SLIDING DOOR SYSTEM

Casper 130
CEILING-FLUSH SLIDING DOOR SYSTEM

Sky 136
PARALLEL CEILING-FLUSH SLIDING DOOR SYSTEM

Bath Line

Technical Guidance 144
BATH LINE

Shower 148
ALUMINUM SLIDING SHOWER ENCLOSURE

Ghibli Quadro 154
STAINLESS STEEL SLIDING SHOWER ENCLOSURE

Lux 160
STAINLESS STEEL SLIDING SHOWER ENCLOSURE

Accessories

Pocket Glass 168
GLASS POCKET FRAME ACCESSORIES

Fixy 169
PROFILES FOR FIXED GLAZING

Galaxy 170
FRAMED POCKET SLIDING DOORS

Locks and Handles

MG-Lock 174
MAGNETIC LOCK FOR STACKING SYSTEMS

Block Lock 181
LOCK FOR SLIDING SYSTEMS

Handles 183
ADHESIVE HANDLES

Training

HD-Emia 186
MC SLIDE PROFESSIONAL SCHOOL

Technical Section

Technical Drawings 189
SYSTEM SECTIONS AND RELATED PROFILES

“Glass systems designed

M C
SLIDE

Mc Slide is an Italian company specializing in the development of high-tech sliding and stacking systems, with advanced solutions designed specifically for the glass industry. Our mission is to advance existing technologies through research, engineering, and the design of intelligent mechanisms that enhance the user experience and the functionality of spaces.

Mc Slide operates two strategic sites, each handling a key stage of production and development.

Rimini site

Production hub for the Interior Line and home to our executive and technical offices, where interior sliding systems are designed with precision.

San Giovanni in Marignano site

Dedicated to the Exterior Line, manufacturing panoramic glazing and all-glass solutions for outdoor, residential, and commercial spaces.




for the future”

THE COMPANY

Mc Slide is synonymous with excellence in sliding glass technology. We design and manufacture innovative solutions that combine design, functionality, and performance, transforming any environment into a bright, elegant, and open space. With a focus on quality and customization, Mc Slide serves customers looking for reliable, aesthetically flawless, and technologically advanced sliding systems. Each product is the result of in-depth knowledge of materials and continuous research to ensure comfort, safety, and durability. Our goal is to deliver superior, innovative experiences, where the transparency of glass meets the precision of technology.

B2B PROJECTS

For companies and manufacturers striving for excellence, we offer B2B OEM solutions designed to enhance your products and accelerate time-to-market. We create detailed designs, complete with professional technical documentation, and collaborate with your team to develop tailor-made solutions.

The result?

Customized products, manufactured to high standards of quality and precision, designed to give your business a real competitive advantage.

SALES OPTIONS

Mc Slide offers maximum commercial flexibility to meet the diverse needs of industry professionals. That is why we offer our sliding glass technologies in two sales formats, designed both for those who manage production in-house and for those who prefer a complete, ready-to-install product. First, we supply semi-finished products for outdoor and indoor sliding systems, providing complete, versatile solutions for every design requirement. Second, we offer the finished product, complete with glass: a turnkey solution for those who want to reduce lead times, in-house processing, and margins of error. The finished product arrives ready to install, guaranteeing precision, performance, and an impeccable aesthetic result.

FINISHED PRODUCT, FULLY GLAZED

With this dual approach, every customer can choose the option best suited to their business model: production freedom with semi-finished products, or practicality and speed with the finished product. Either way, we offer the same level of quality, technical assistance, and professional support, because our goal is to help you create sliding solutions that are reliable, elegant, and functional.

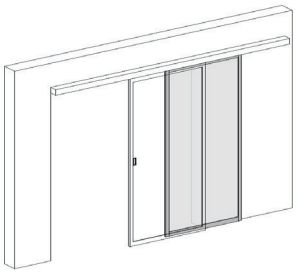

SEMI-FINISHED PRODUCTS AND PROFILES

- bars and complete kits;
- our kits contain everything needed to create the sliding glass door;
- profiles ready for the installation of sliding systems;
- accessories and components;
- dedicated seals and small parts.

This solution is ideal for window and door fabricators, glaziers, and installers who want to keep control over the production process, customize finishes, or assemble in their own workshop. We offer high-quality materials, designed to ensure smooth sliding, reliability, and long-term durability.

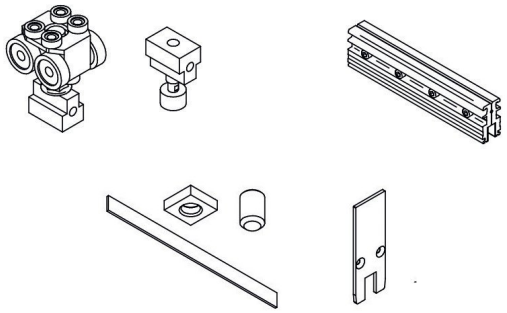

OUR CLIENTS

We supply finished and semi-finished products to a comprehensive network of industry professionals: awning makers, glass fabricators, window and door fabricators, industry, and distributors. With versatile, modular solutions designed for different production needs, we back every customer with reliable materials, high-performance systems, and constant support throughout the supply chain.

Glass fabricators are industrial companies that process tempered, laminated, and insulating glass. They provide solutions for architecture and construction sites and manufacture glass products for sectors such as building, architecture, automotive, and furniture. Window and door fabricators are artisans or specialized technicians who manufacture, install, and maintain windows and doors, such as:
- windows;
- interior and exterior doors;
- French windows;
- roller shutters;
- glazing and sliding systems.

Awning makers produce:
- awnings;
- exterior fixtures;
- shading systems;
- motorized systems, roller shutters;
- pergolas, bioclimatic pergolas;
- gazebos;
- porches.

SALES NETWORK

More than 40 agents throughout Italy

Our commitment has always been to support industry professionals with reliable, innovative solutions that simplify their daily work. Mc Slide serves the key sectors of the light construction supply chain: window and door fabricators, awning makers, glass fabricators, industry, and distributors, businesses that share the need for quality materials, high-performance technical components, and fast, expert service.

WINDOW AND DOOR FABRICATORS find in our catalogue a complete range of products designed to support every stage of their work, from the drawing on paper to the installation of sliding systems, functional accessories and advanced hardware. We offer selected items that guarantee reliability, durability and precision in fitting — essential in a market that demands ever greater attention to detail and to energy performance.

For AWNING MAKERS, specialists in the design and installation of awnings, shading and blackout systems, we offer robust and versatile solutions.

GLASS FABRICATORS can count on a selection of accessories and complementary materials designed to bring out the quality of the glass and make it easier to process and install.

THE GLASS INDUSTRY processes flat glass through advanced operations such as tempering, lamination, grinding, drilling and the production of insulating glass. It makes tempered, laminated and insulating glass, guaranteeing the mechanical, thermal and safety performance required for windows and doors, façades, parapets and glass sliding systems.

DISTRIBUTORS manage the supply of technical components for glass and window frames, ensuring immediate product availability, commercial support and fast delivery to the professionals in the chain.

Our aim is to support these businesses as sliding technologies and solutions evolve, offering items suited to residential, commercial and larger-scale architectural projects.

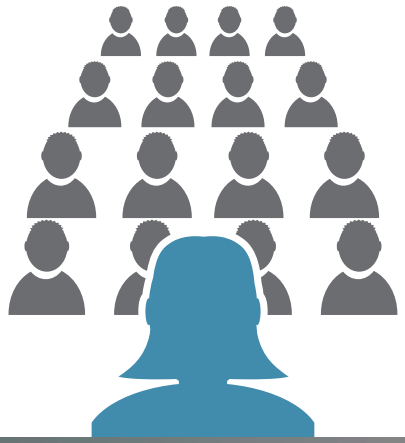

Our clients are:

- window and door fabricators
- awning makers
- glass fabricators
- manufacturers
- distributors

With our sales network and constant product updates, we are committed to being the ideal partner for every professional in the industry.

Glass fabricators are industrial companies that produce tempered, laminated, and insulating glass. They offer solutions for architecture and construction sites and manufacture glass products for sectors such as construction, architecture, automotive, and furniture.

Window and door fabricators are artisans or technicians specializing in the manufacture, installation, and maintenance of windows and doors, such as:

- windows
- interior and exterior doors
- French windows
- shutters and roller shutters
- glazing and sliding systems
- gazebos
- porches

Awning makers produce:

- awnings
- exterior fixtures
- shading systems, motorized systems, roller shutters

Glass fabricators can rely on a selection of accessories and complementary materials designed to enhance the quality of the glass and simplify its fabrication and installation.

Glass industries transform flat glass through advanced processes such as tempering, laminating, grinding, drilling, and double-glazing. They produce tempered, laminated, and insulating glass, ensuring mechanical, thermal, and safety performance for windows, facades, parapets, and sliding glass systems.

Distributors manage the supply of technical components for glass and windows, ensuring immediate product availability, sales support, and rapid deliveries to industry professionals. Our goal is to support these businesses in the evolution of technologies and sliding solutions, offering products suitable for broader residential, commercial, or architectural projects.



showroom

technical office



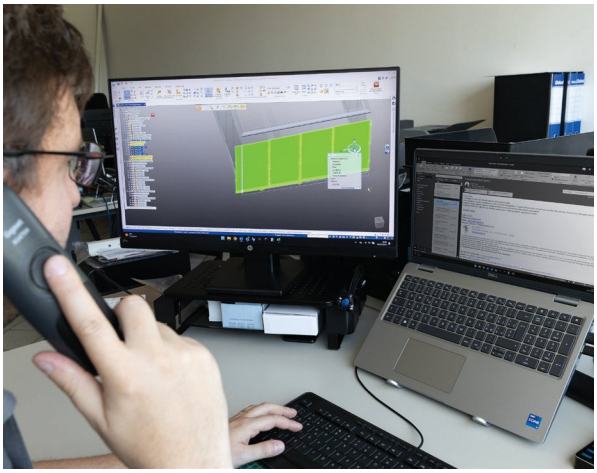









production

quality control



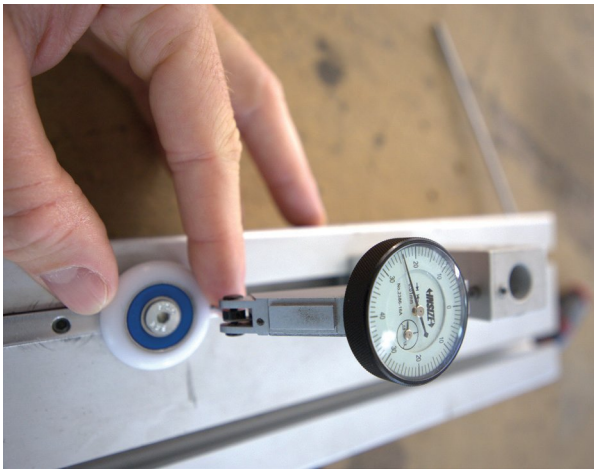



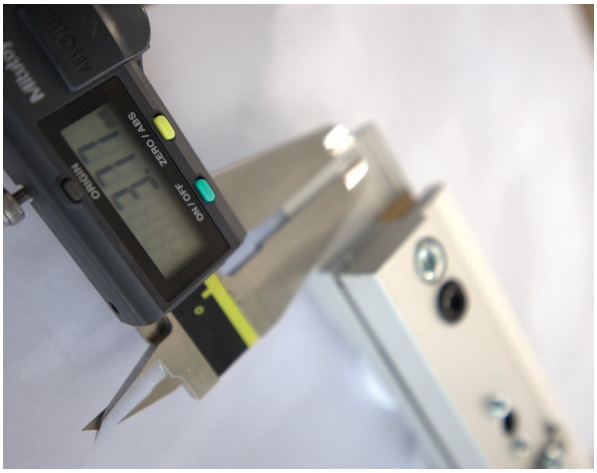



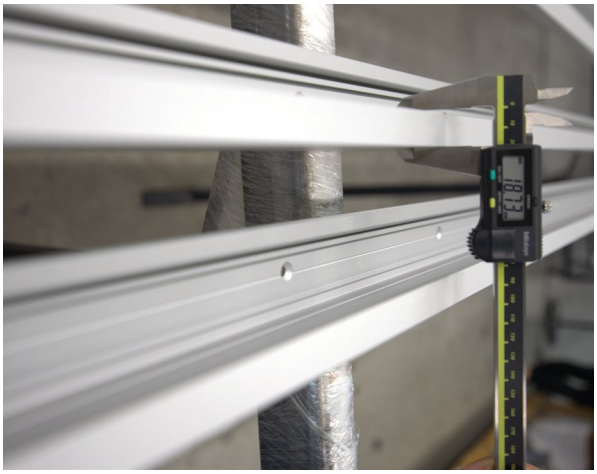

The future of the configurator is here:

Market evolution and the growing demand for fast, precise, and customizable solutions have made a new approach to digital tools indispensable for professionals. This need led Mc Slide to create its new software, “VD Slide”: a tool designed to simplify, innovate, and enhance every phase of the work, from the first contact with the client to the final quote. The true innovation lies not only in its functionality, but in the philosophy behind it. We have designed a system that adapts to our clients’ needs, minimizing errors, speeding up processes, and offering an intuitive experience even in the mos technical operations.

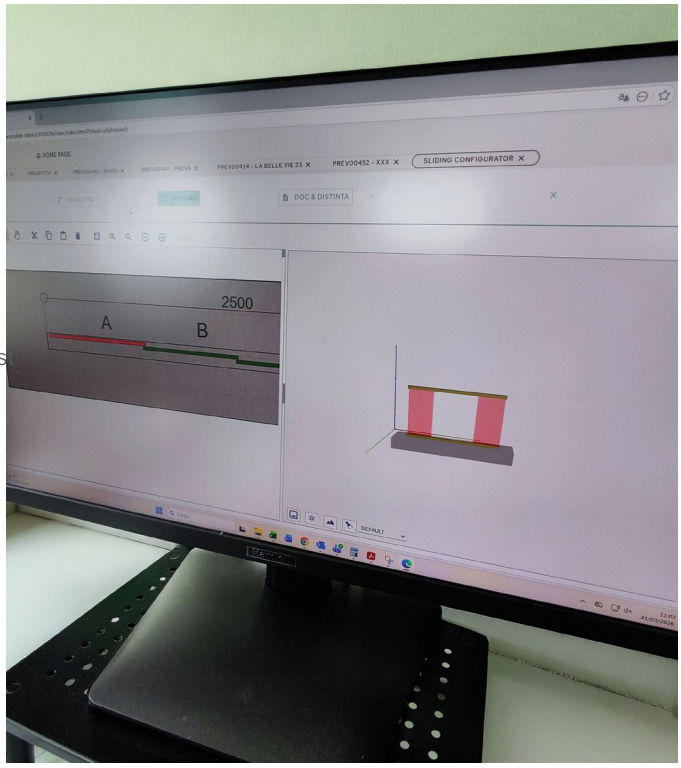

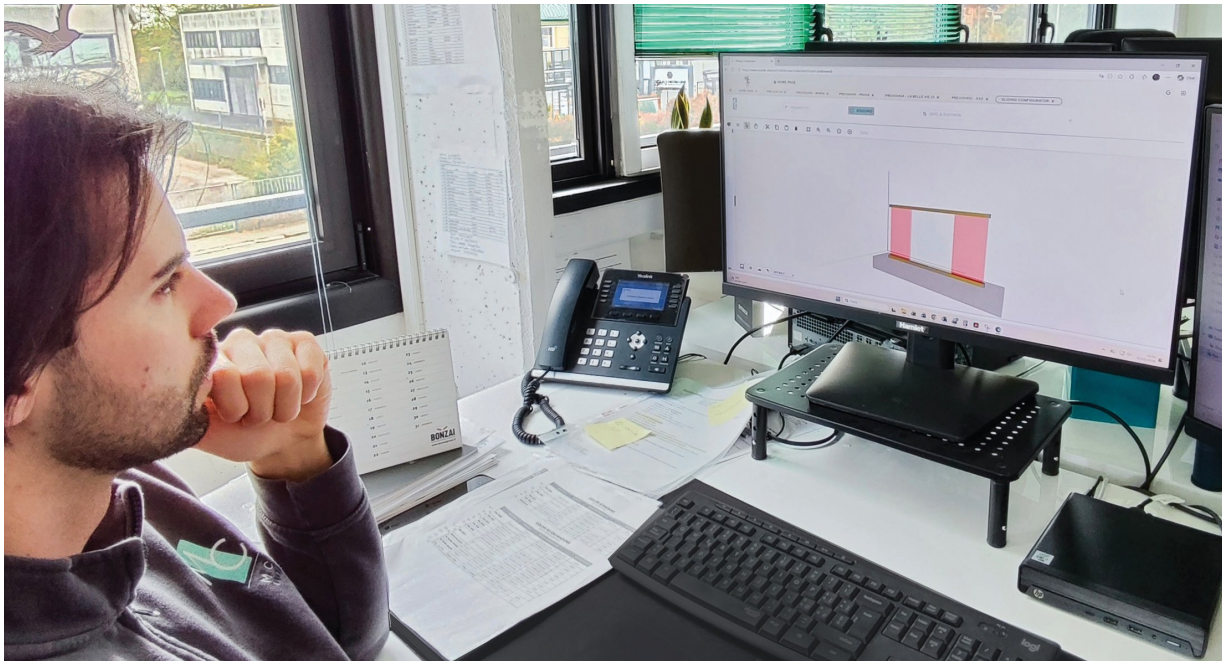



1

DESIGN

Our technical department supports you through every stage of design, from system selection to on-site execution of the project.

2

PRACTICALITY

All our systems are designed to be modular and easy to install. With clear instructions and assembly videos, we give our customers the best possible support.

3

OUR MARKETS

- glaziers
- window fitters
- awning makers
- distributors
- industries

4

RESEARCH AND DEVELOPMENT

Our customers' needs drive our research and development, as we constantly seek new, ever more effective solutions.

5

DESIGN

Our Italian heart drives us to create systems that are easy to install, without ever losing sight of aesthetics.

6

QUALITY

Our products are designed, engineered, and manufactured in Italy to high quality standards, delivering the best to our customers and yours.

7

SAFETY

We carry out in-house testing and, for our main products, testing at Istituto Giordano to ensure maximum safety.

Architectural Project



This residential project is the perfect blend of contemporary architecture and the most advanced sliding solutions from our Interior & Exterior Mc Slide collection. The rooms become fluid, bright, and seamless spaces, where each system is engineered to enhance the design and ensure excellent performance. The glazed openings expand the perception of space, creating a constant dialogue between interior and exterior. The essential profiles, clean lines, and technology of our sliding systems offer comfort, safety, and a timeless aesthetic. By combining our sliding systems, from panoramic thermally broken solutions to fully concealed models, this project embodies a new concept of living: open, elegant, and focused on everyday well-being.

GROUND FLOOR

Starglass
Sliding Floor
Folding
Parking
Pratik
Sky
Ghibli




LIBRA
CASPER
FRONTAL
MAGLEV
SHOWER
PARKING
SLIDING FLOOR

UPPER FLOOR

Libra
Casper
Fusion
Maglev
Frontal
Shower

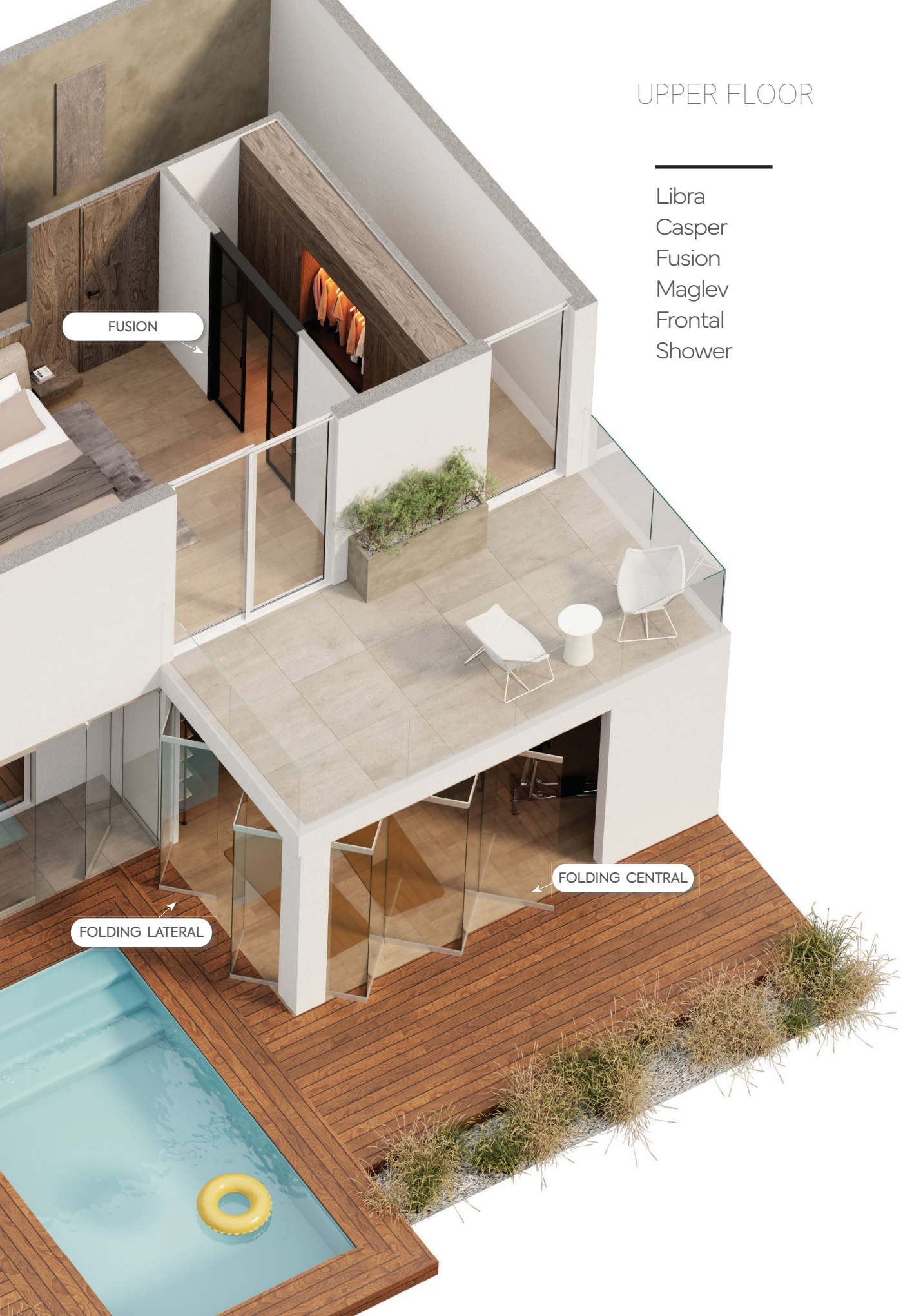











Line
Exterior

TECHNICAL GUIDANCE

	SLIDING FLOOR	STARGLASS
	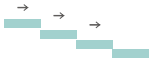	
Number of panels	1 ÷ 6+6	1 ÷ 8 custom solutions
Max panel width	1,300 mm (51.2")	800 mm (31.5")
Max opening height	3,000 mm (118.1") (2,500)	3,000 mm (118.1") (2,500)
Max panel weight	130 kg (287 lb)	50 kg (110 lb)
Glass thickness	10 mm (0.39") (55.2)	10 mm (0.39") (55.2)
Load support	bottom-supported	top-hung
Lower guide type	standard H = 21 mm goose beak H = 21 mm recessed H = 1 mm	standard H = 34 mm goose beak H = 15 mm recessed H = 7 mm
Recommended applications	wooden pergolas, bioclimatic pergolas, porches, verandas, gazebos	terraces, balconies, loggias
Istituto Giordano certifications	UNI EN 11998:2025 CLASS 6 UNI EN 13659:2015	UNI EN 11998:2025 CLASS 6 UNI EN 13659:2015

UNI 11998:2025

"Removable glazed systems - Classification, functional and performance characteristics", which sets out the technical and safety requirements for Removable Panoramic Glazing (VEPA).

LIBRA	FOLDING LATERAL	FOLDING CENTRAL	PARKING
	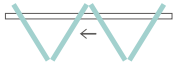	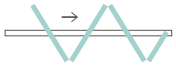	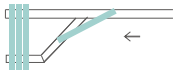
1 ÷ 8 custom solutions	1 ÷ 7 custom solutions	1 ÷ 6.5 custom solutions	∞
800 mm (31.5")	1,000 mm (39.4")	1,000 mm (39.4")	1,200 mm (47.2")
3,000 mm (118.1")	3,000 mm (118.1")	3,000 mm (118.1")	3,500 mm (137.8")
50 kg (110 lb)	90 kg (198 lb)	90 kg (198 lb)	150 kg (331 lb)
10 mm (0.39")	10 - 12 mm (0.39" - 0.47") (55.2 - 66.2)	10 - 12 mm (0.39" - 0.47") (55.2 - 66.2)	10 - 12 mm (0.39" - 0.47") (55.2 - 66.2)
bottom-supported	top-hung	top-hung	top-hung
standard H = 61 mm recessed H = 9 mm	standard H = 27 mm recessed H = 2 mm	dustproof floor sockets	dustproof floor sockets
terraces, balconies, loggias	businesses, offices, meeting rooms, large spaces to be divided	businesses, offices, meeting rooms, large spaces to be divided	restaurants, public areas, storefronts, stores, ice cream parlors, airports
UNI EN 11998:2025 CLASS 6 UNI EN 13659:2015	UNI EN 11998:2025 CLASS 6 UNI EN 13659:2015	UNI EN 11998:2025 CLASS 6 UNI EN 13659:2015	UNI EN 11998:2025 CLASS 6 UNI EN 13659:2015

UNI 11998:2025

The standard specifies where to use laminated glass and tempered glass

▪ LAMINATED GLASS: must NOT be used for glazing anchored to a parapet; | TEMPERED GLASS: can be used in all applications, including above parapets.



SLIDING FLOOR

all-glass sliding system with ABS technology

new integrated brake technology with damper, certified for 200,000 cycles

Sliding Floor has been updated with an integrated brake that ensures smooth, controlled, and safe closing of the sliding glass panel, in both lateral and opposing-panel configurations. The heart of the system is a deceleration unit partially recessed into the glass, with a damper and return spring, which engages an adjustable stop in the upper track. This technology reduces impact, vibration, and noise, improving comfort and system durability. An optional anti-jumping system is available to prevent the glass from lifting and the carriage from derailing, and can also be retrofitted. Easy to install and minimally invasive, the brake is compatible with both new and existing interior and exterior sliding glass systems. It integrates seamlessly into the upper track, with coordinated finishes for an elegant, high-tech look.





Safety and protection for the whole family

Stop&Slide

ABS safety system

Mc Slide introduces a new integrated brake designed to ensure smooth, controlled, and safe closing of sliding glass panels.



PATENTED INNOVATION

We are a leader in developing and patenting cutting-edge sliding technologies, engineered for superior performance and innovative solutions across the industry.

HIGH STANDARDS, ITALIAN DESIGN

With passion and expertise, Mc Slide creates sliding systems that redefine the standards of quality and design, exclusively Made in Italy.

SLIDING FLOOR

key benefits

Integrated brake
The integrated brake guides the panel as it closes, reducing the risk of pinched fingers and ensuring safe, comfortable closing.

Design and innovation
Brake partially recessed into the glass for a sleek, minimalist look.

Smooth, silent operation
Eliminates impacts and prevents vibration for a more pleasant user experience.

Fully compatible with existing tracks
Fully compatible with existing Mc Slide tracks. Ideal for new installations or for breathing new life into existing systems.

Safety and reliability
The optional anti-jump module prevents the glass from lifting and the carriage from derailing.

Quick installation
Suitable for a wide range of residential and commercial settings.

Aesthetic harmony
Cover plates matched to the guides for a refined finish that blends with any setting.

Sustainable choice
Upgrade and modernize existing systems without replacing them entirely: all it takes is new glass prepared for the brake.

Adjustable force
Return-spring preload can be matched to the panel weight during assembly.

Stability
Wheel built into the brake body runs in the top track, boosting panel stability and reducing glass-to-brush friction.





Stop&Slide
ABS safety system

The integrated brake guides the panel as it
closes, reducing the risk of pinched fingers and ensuring a safe, comfortable experience.

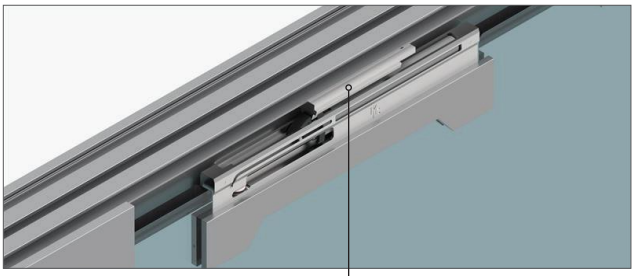

Integrated brake
Stop&Slide

Safety and protection for the whole family



The integrated brake guides the panel as it closes, reducing the risk of trapped fingers and ensuring a safe, comfortable user experience.

SLIDING FLOOR



Custom-made, press-bent 3 mm aluminum compensation profile, powder-coated to match the other profiles. Useful for steeply sloped floors and/or ceilings.

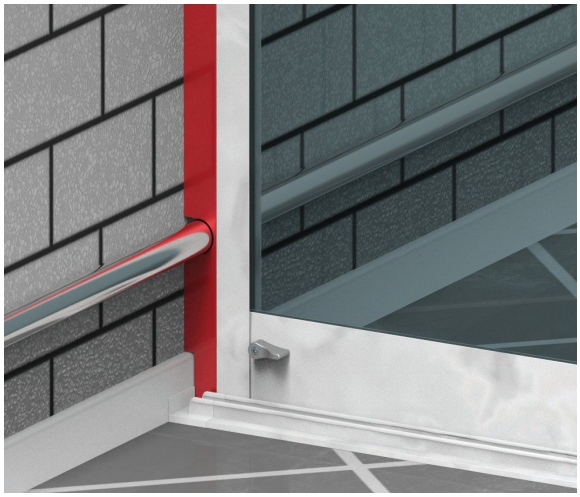

Custom-made, press-bent 1.2 mm aluminum compensation profile, powder-coated to match the other profiles. Useful for clearing wall obstructions such as baseboards, pipes, and uneven surfaces.

LOWER GUIDE

lower guide

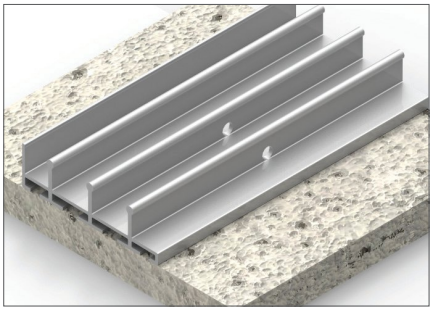

STANDARD



RECESSED

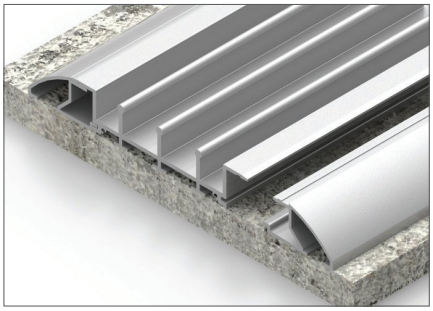

LOWERED

Key benefits of Sliding Floor technology

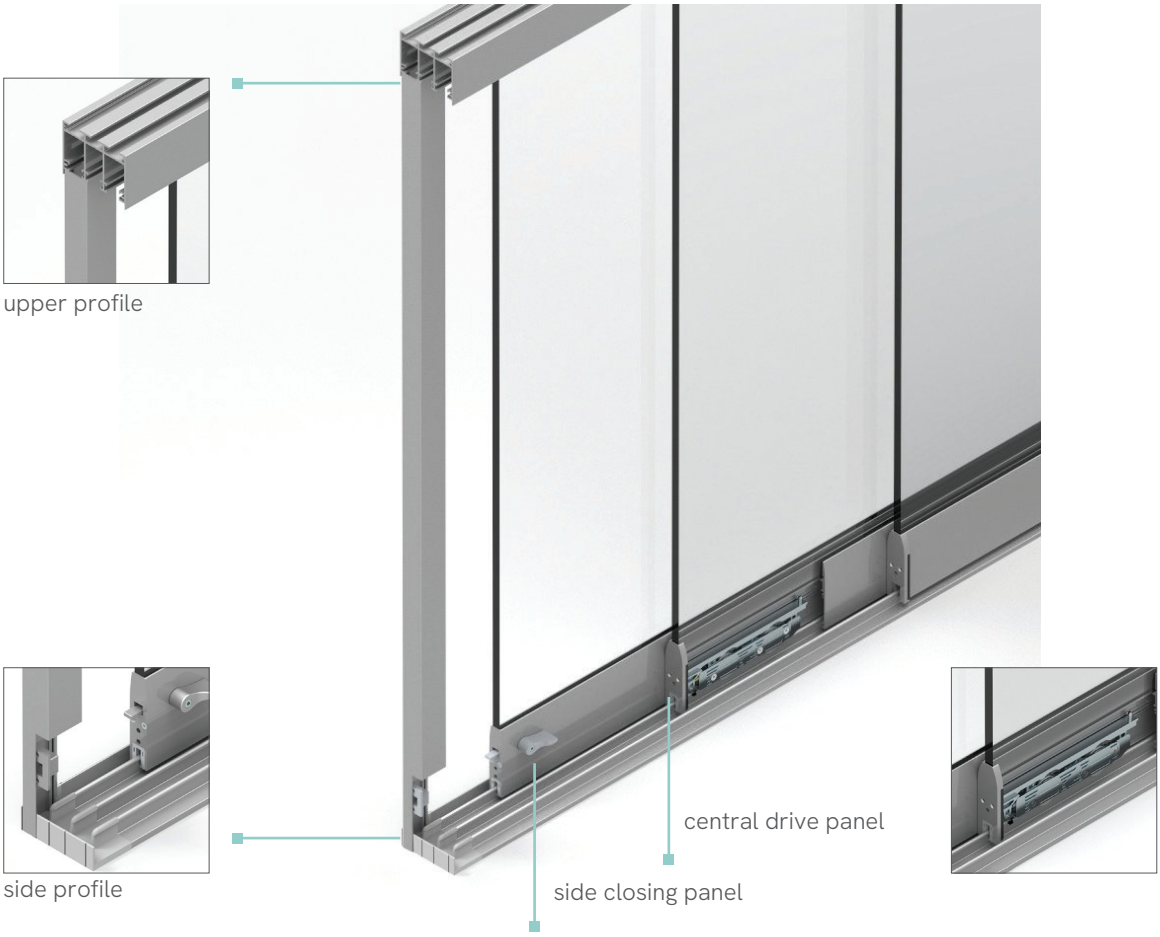



EXTRA CARRIAGE

The innovative EXTRA carriage delivers high-performance, ultra-smooth sliding. Two Ø 29 mm rollers with double-shielded Ø 19 mm steel bearings.

Load capacity up to 130 kg per panel.

Sliding Floor

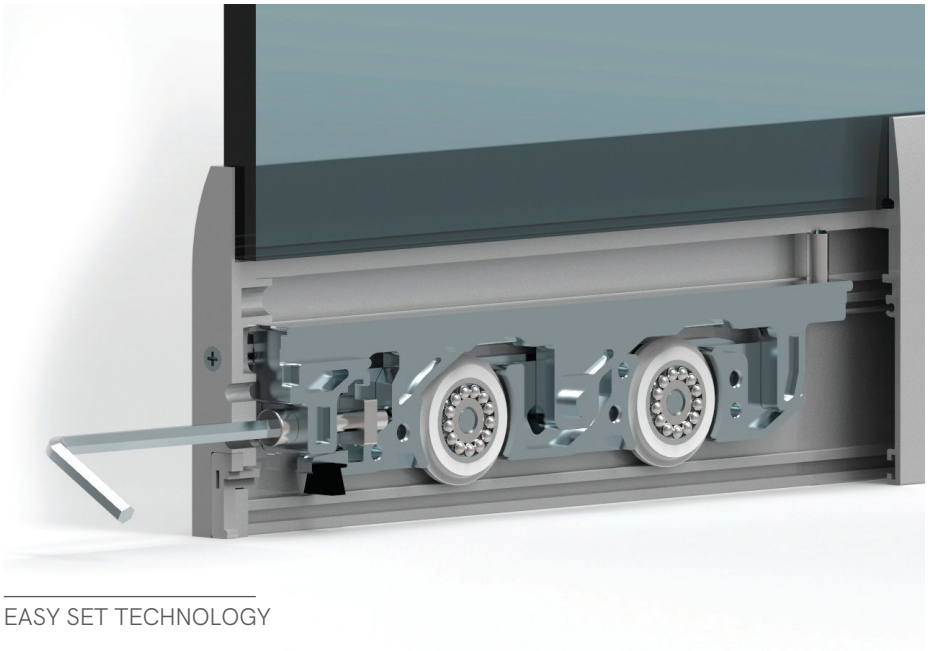

EASY SET TECHNOLOGY

The carriage can be adjusted laterally with the panel in place, without lifting it, reducing installation time. Tested for 100,000 continuous opening and closing cycles.

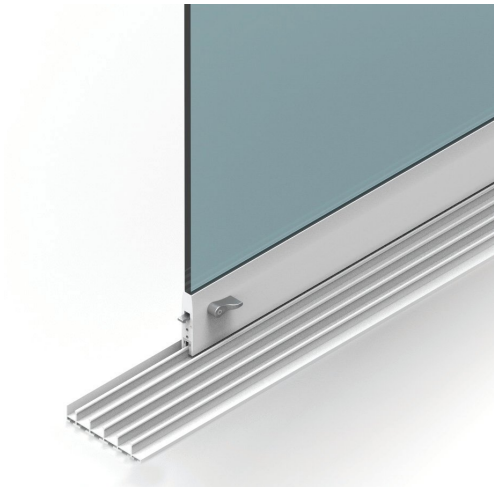

ELEGANCE AND DESIGN

The sleek, curved operating lever gives a modern, contemporary look. The minimal anti-derailment guard disappears inside the end cap.

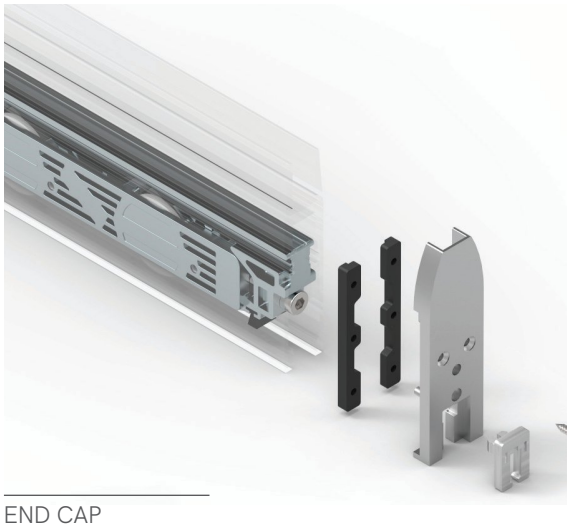

END CAP

The ambidextrous end cap, with a larger drive contact surface, delivers improved durability and mechanical strength: an ideal product for installers.

TECHNICAL DRAWINGS
see page 190

SLIDING FLOOR

Number of panels	1 ÷ 6+6
Max panel width	1,300 mm (51.2")
Max opening height	3,000 mm (118.1")
Max panel weight	130 kg (287 lb)
Glass thickness	10 mm (0.39") (55.2)
Load support	bottom-supported
Lower guide type	standard = h 21 mm goose beak = h 21 mm recessed
Recommended applications	wooden pergolas, bioclimatic pergolas, porches, verandas, gazebos

SPECIFICATIONS

Sliding Floor consists of:

- a series of panels, each made of a glass pane and an aluminum profile;
- the individual panels slide parallel to each other on a lower guide with 2 to 6 tracks;
- the panels glide on carriages fitted with polymer-coated ball-bearing rollers;
- the weight of the panels is transferred to the floor via the lower carriages, which are equipped with a vertical adjustment mechanism;
- a coupling system moves all panels by operating the first one only. The system opens in both directions and is completed by gaskets and brushes for maximum air and water tightness.

SLIDING FLOOR SYSTEM
Wind: up to 120 km/h

BEAUFORT SCALE - UNI EN 13659:2015		
CLASS 1 **Wind: 29 km/h**	Moderate breeze	
CLASS 2 **Wind: 38 km/h**	Fresh breeze	
CLASS 3 **Wind: 48 km/h**	Strong breeze	
CLASS 4 **Wind: 60 km/h**	Near gale	
CLASS 5 **Wind: 76 km/h**	Gale	
CLASS 6 **Wind: 92 km/h**	Strong gale	

VEPA

UNI 11998:2025

"Removable glazed systems - Classification, functional and performance characteristics", which defines the technical and safety requirements for Removable Panoramic Glazing (VEPA).

The standard specifies where to use laminated glass and tempered glass:

- **LAMINATED GLASS:**
  NOT to be used for glazing anchored to a parapet;
- **TEMPERED GLASS:**
  can be used in all applications, including above parapets.

FEATURES

STRUCTURE Extruded primary-alloy aluminum, epoxy-polyester powder-coated, UV-resistant	**PANELS** Extra-clear Laminated glass 55.2 class 1B1 UNI EN 12600	**DIMENSIONS** Single panel max 1,300 mm (51.2") Tempered H max 3,000 mm (118.1") Laminated H max 2,500 mm (98.4")	**OPENING** Side (single) or central (bi-parting panels)	**SLIDING** Bottom-rolling	**PANEL ADJUSTMENT** +/- 4 mm	**GAP BETWEEN PANELS** 12 mm	**FASTENERS** Corrosion-resistant, stainless steel and galvanized
CARRIAGES Die-cast metal carriages, adjustable in place.	**LOAD CAPACITY** Up to 130 kg (287 lb)	**SIDE END CAPS** Powder-coated die-cast metal with integrated panel drive	**THERMAL INSULATION** Tempered glass 10 mm, g 0.81	**GLASS ACOUSTIC INSULATION** Tempered glass 10 mm | 33 (-2;-3) dB Laminated glass 55.2 | 34 (-1;-3) dB	**ACCESSIBILITY** No restriction to passage	**IST. GIORDANO CERTIFICATIONS** Class 6 EN 13659 UNI EN 11998:2025	**MATERIALS** 95% recyclable

PROFILE COLORS

RAL 9010
Pure white - matte/gloss

RAL 1013
Pearl white - matte/gloss

RAL 9016
Traffic white - matte/gloss

RAL 9005
Deep black - matte

Anodized silver

AKZO NOBEL SW305I
Iron gray - textured

RAL 7016
Anthracite gray - textured/matte

Micaceous gray - textured

RAL 7035
Light gray - matte/gloss

RAL 8017
Chocolate brown - matte/gloss/textured

RAL 1019
Gray beige - matte

AKZO NOBEL SX350F
Corten - textured

GLASS



Tempered



Laminated



Laminated tempered

GLASS FINISH



Extra-clear



Smoked



Satin



LIBRA

UPGRADE

Stackable all-glass bottom-rolling system

integrated 4D adjustment system

Libra is a removable panoramic glazing system designed and manufactured to combine elegance, functionality, and maximum transparency. Its refined design turns a wall into a continuous panoramic view, enhancing natural light and creating a harmonious connection between indoors and outdoors. The system consists of coplanar panels that glide smoothly, allowing the opening to be adjusted as needed. One panel acts as a hinged door, positioned in the stacking area where the remaining panels are collected. For a full opening, the panels slide toward the stacking area and swing open like hinged doors, creating a wide, free, and uninterrupted passage. With Libra, every space gains light, room, and freedom.



LIBRA

Italian design

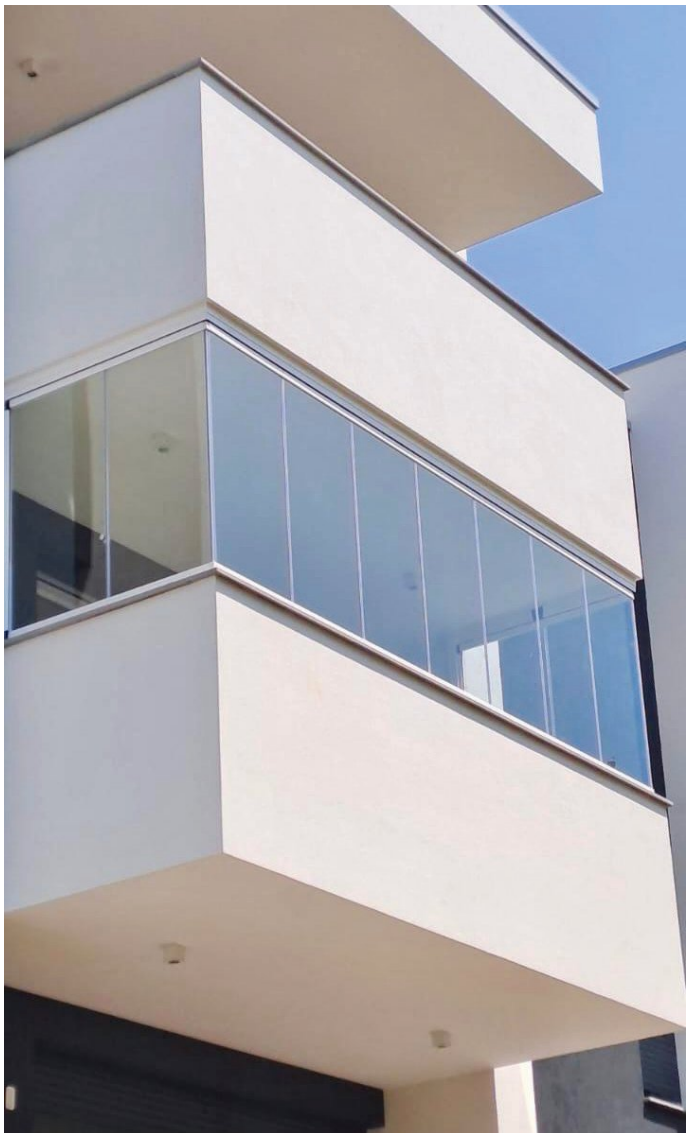

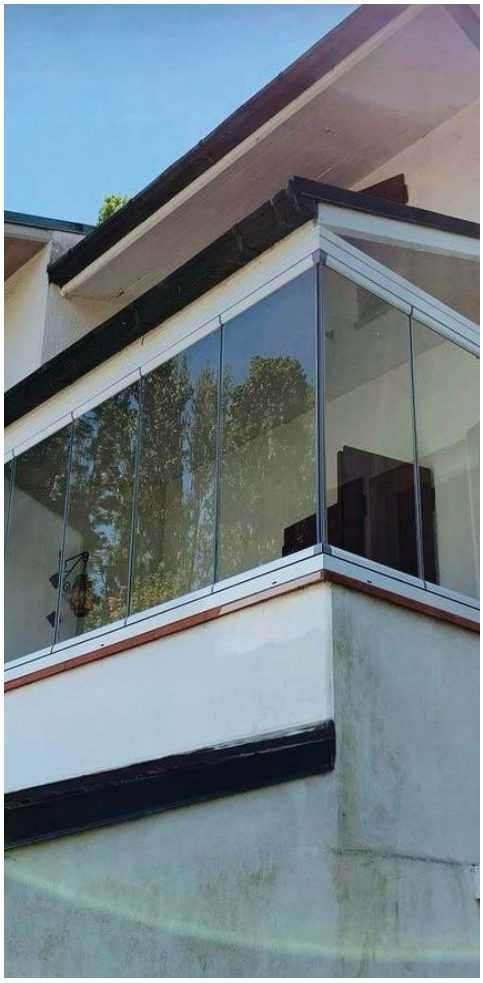

LIBRA | **4D upgrade**

The Libra | 4D upgrade system ensures easy installation and simple adjustment, compensating for out-of-plumb walls. With the RE-BLOCK® accessory between the two profiles, you can achieve:

- **0 to 9 mm adjustment with:**
  RE-BLOCK®
- **9 to 20 mm adjustment with:**
  RE-BLOCK® + additional shim

4D upgrade

VERTICAL COMPENSATION UPRIGHT

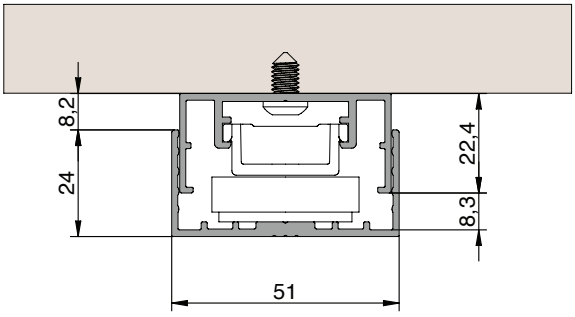

What 4D does:

[1. Compensate for uneven walls] [2. Improve the stability of the installed structure] [3. Avoid trimming or out-of-square components] [4. Simplify installation on uneven walls]

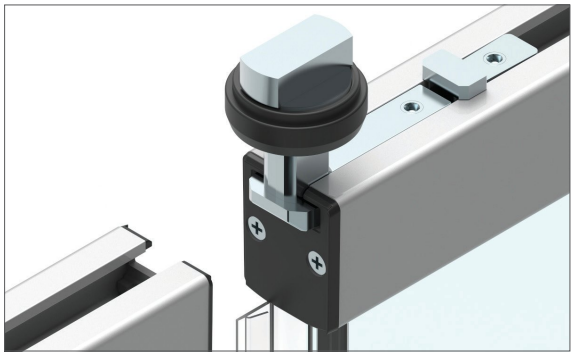

QUALITY CARRIAGE COMPONENTS



VERTICAL ADJUSTMENT UPRIGHT

LOWER GUIDE

lower guide

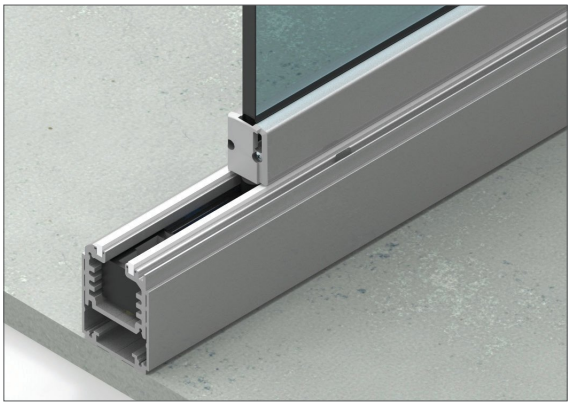

STANDARD



RECESSED

OPENING LEVELING PROFILES



Custom-made, press-bent 3 mm aluminum compensation profile, powder-coated to match the other profiles. Useful for steeply sloped floors and/or ceilings.



Custom-made, press-bent 1.2 mm aluminum compensation profile, powder-coated to match the other profiles. Useful for clearing wall obstructions such as baseboards, pipes, and uneven surfaces.



CORNER SOLUTIONS

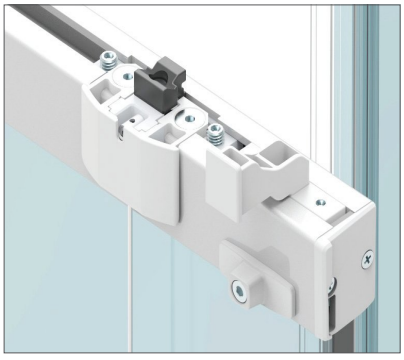

UPPER CLOSURE

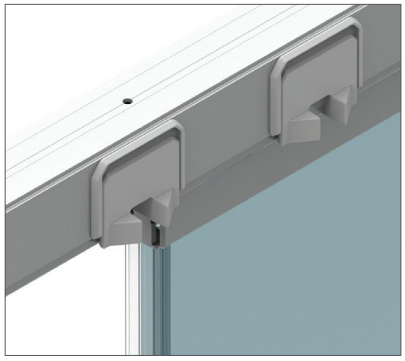

FLEXIBILITY AND AESTHETICS

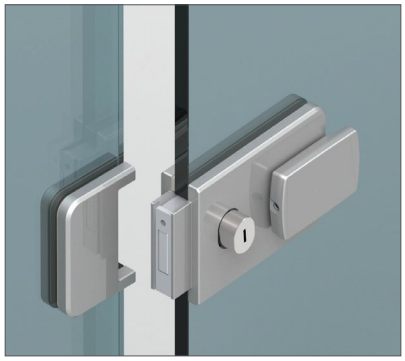

MG-LOCK LOCK

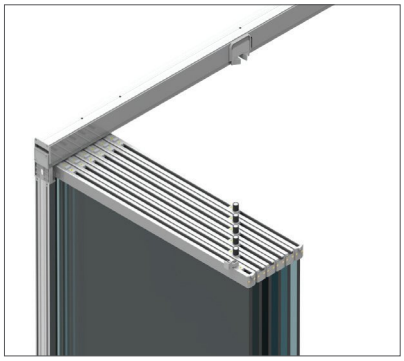

EASY CLEANING

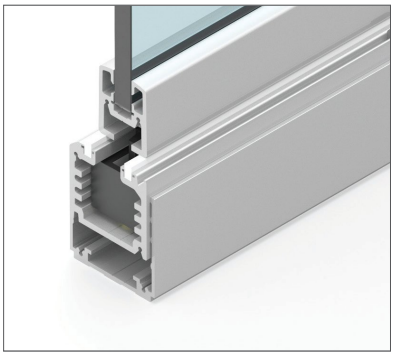

LOWER PROFILE

Key benefits of Libra technology

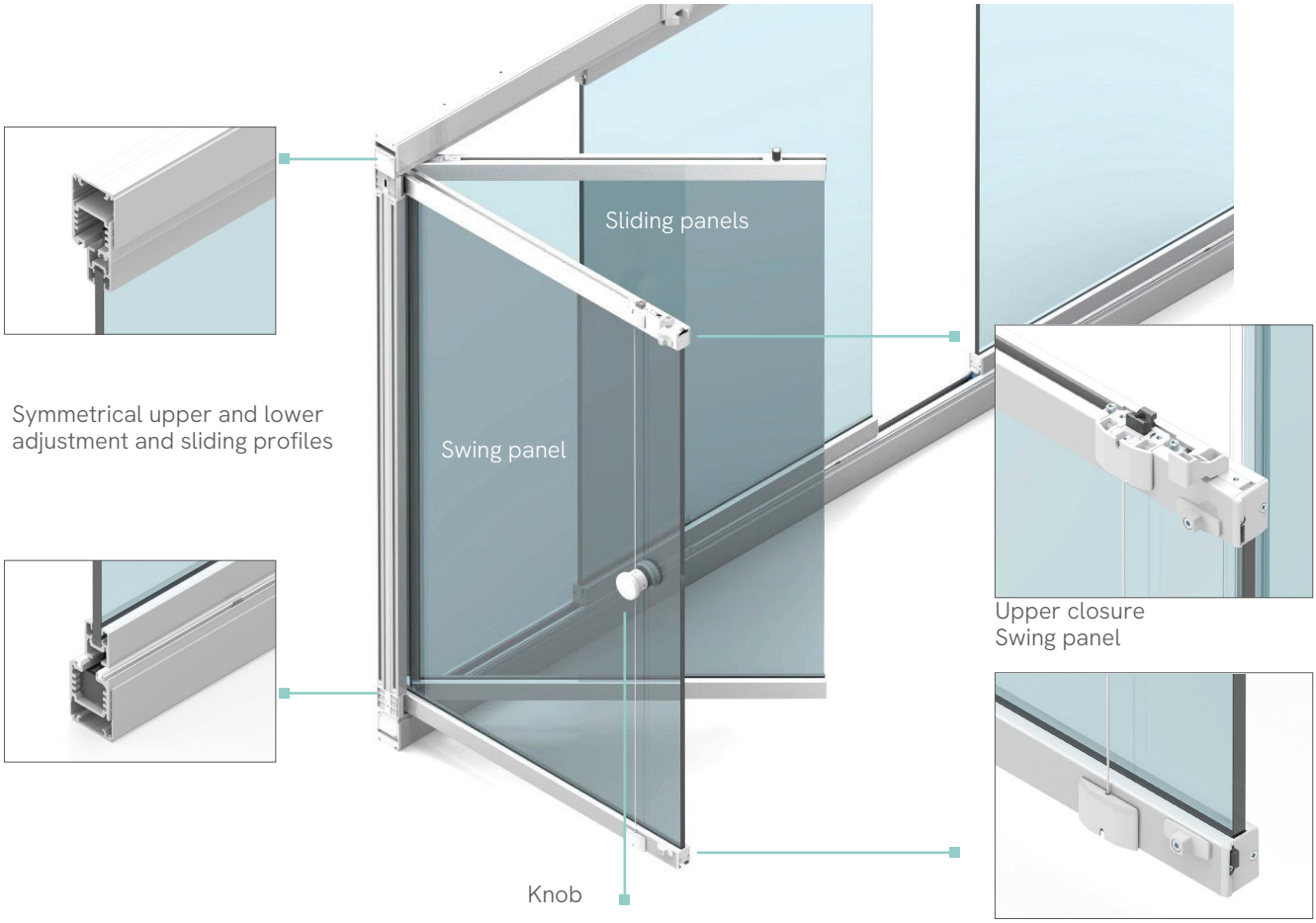

Symmetrical upper and lower adjustment and sliding profiles

Upper closure
Swing panel

Lower closure
Swing panel



RE-BLOCK® TECHNOLOGY

The exclusive RE-BLOCK® adjustment system makes it easy to shim the lower sliding guide with dedicated modular, interchangeable inserts, compensating even for steep floor slopes and leveling the guide perfectly.

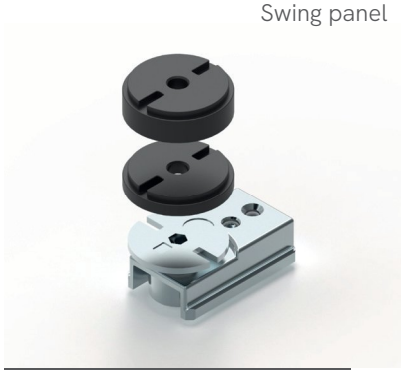

RE-BLOCK® ADJUSTMENT

RE-BLOCK® is easily adjusted with a simple hex key acting directly on the inserts between the compensation profile and the sliding guide. Modular inserts eliminate long screws, so no additional holes need to be drilled in the floor.

Libra | **4D upgrade**

VERTICAL COMPENSATION UPRIGHT



MG-LOCK LOCK



4D COMPENSATION UPRIGHT

Support accessory for easier installation on uneven walls

TECHNICAL SPECIFICATIONS

TECHNICAL DRAWINGS
see page 196

LIBRA

Number of panels	1 ÷ 8 custom solutions
Max panel width	800 mm (31.5")
Max opening height	3,000 mm (118.1")
Max panel weight	50 kg (110 lb)
Glass thickness	10 mm (0.39")
Load support	bottom-supported
Lower guide type	standard = h 66 mm recessed = h 9 mm
Recommended applications	*terraces, balconies, loggias*

SPECIFICATIONS

Libra consists of: a series of coplanar panels, at least one of which is a swing panel located in the stacking area where all the panels are collected. The remaining panels slide and, once moved into the stacking area, swing open like a hinged door to leave the opening clear. The system is closed by pivoting the individual panels and then sliding them until they sit side by side; the panels (both swing and sliding) consist of glass panes and aluminum profiles.

LIBRA SYSTEM Wind: up to 160 km/h		
BEAUFORT SCALE - UNI EN 13659:2015		
CLASS 1 **Wind: 29 km/h**	Moderate breeze	
CLASS 2 **Wind: 38 km/h**	Fresh breeze	
CLASS 3 **Wind: 48 km/h**	Strong breeze	
CLASS 4 **Wind: 60 km/h**	Near gale	
CLASS 5 **Wind: 76 km/h**	Gale	
CLASS 6 **Wind: 92 km/h**	Strong gale	

VEPA

UNI 11998:2025

"Removable glazed systems - Classification, functional and performance characteristics", which defines the technical and safety requirements for Removable Panoramic Glazing (VEPA).

The standard specifies where to use laminated glass and tempered glass:

- **LAMINATED GLASS:**
  NOT to be used for glazing anchored to a parapet;
- **TEMPERED GLASS:**
  can be used in all applications, including above parapets.

FEATURES

STRUCTURE Extruded primary-alloy aluminum, epoxy-polyester powder-coated, UV-resistant	**PANELS** Extra-clear	**DIMENSIONS** Single panel min 800 mm Tempered H max 3,000 mm	**OPENING AND SLIDING** Side and swing opening with stacking area	**OPENING DIRECTION** Inward or outward, side opening (left/right) or both sides for bi-parting openings	**PANEL ADJUSTMENT** + 7 mm / - 5 mm	**FASTENERS** Corrosion-resistant, stainless steel and galvanized	**LOAD SUPPORT** Bottom-supported: panel weight carried by the lower profile
LOAD CAPACITY Up to 50 kg per panel	**OPENING HARDWARE** Handle with lock and operating knob	**THERMAL INSULATION** Tempered glass 10 mm, g 0.81	**GLASS ACOUSTIC INSULATION** Tempered glass 10 mm | 33 (-2;-3) dB	**ACCESSIBILITY** No restriction to passage, recessed lower profile	**IST. GIORDANO CERTIFICATIONS** Class 6 EN 13659	**MATERIALS** 95% recyclable	

PROFILE COLORS

RAL 9010
Pure white - matte/gloss

RAL 1013
Pearl white - matte/gloss

RAL 9016
Traffic white - matte/gloss

RAL 9005
Deep black - matte

Anodized silver

AKZO NOBEL SW305I
Iron gray - textured

RAL 7016
Anthracite gray - textured/matte

Micaceous gray - textured

RAL 7035
Light gray - matte/gloss

RAL 8017
Chocolate brown - matte/gloss/textured

RAL 1019
Gray beige - matte

AKZO NOBEL SX350F
Corten - textured

GLASS



Tempered

GLASS FINISH



Extra-clear



Smoked



Satin



STARGLASS

UPGRADE

Stackable top-hung all-glass system

integrated 4D adjustment system

Starglass is a stackable glazing system with a lead swing panel and sequential sliding that eliminates stacking bays, simplifying cleaning and enhancing overall aesthetics. Available in 3 configurations:

H 34:
34 mm lower guide, ideal for balconies, loggias, and terraces, offering stability and durability while maintaining a discreet profile.

H 15:
lowered guide, just 15 mm, compliant with accessibility regulations, ideal for barrier-free spaces open to the public.

Recessed guide:
an elegant, minimalist solution, ideal for spaces requiring visual continuity and an uncluttered look.

Upper compensation profile:
standard, to correct out-of-square openings.

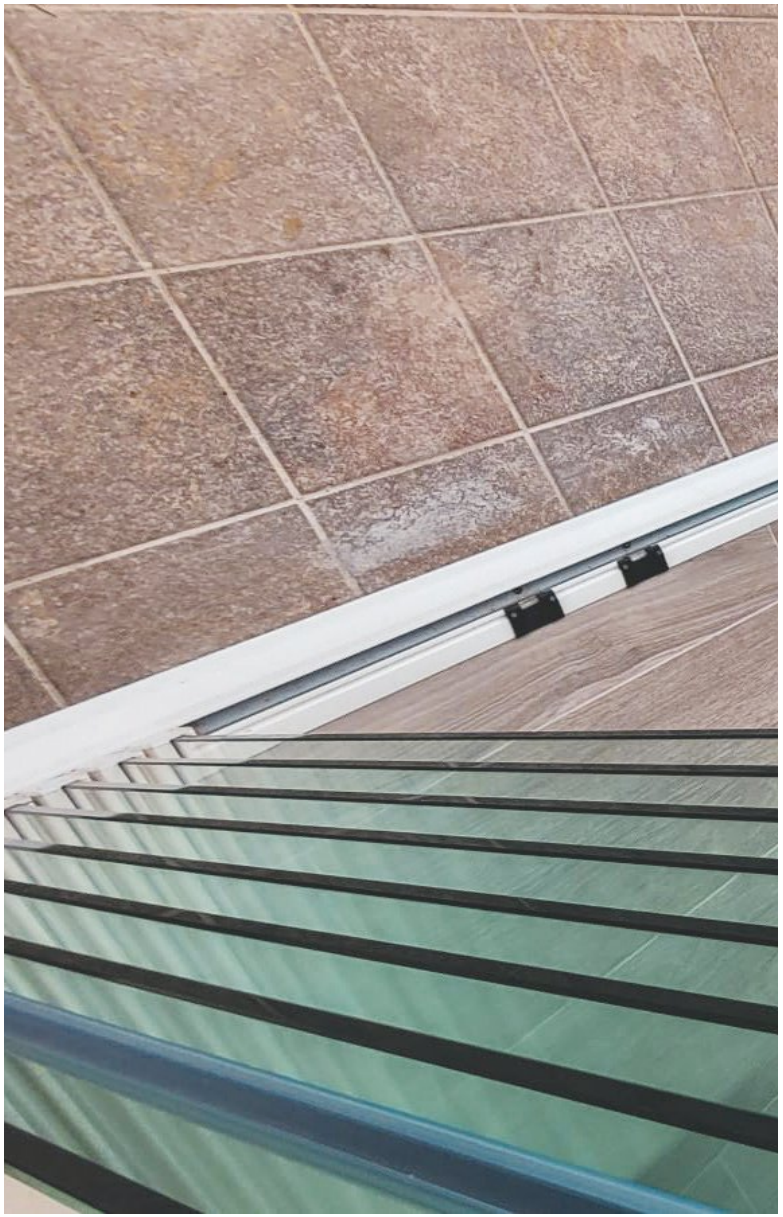



4D adjustment system

Easy to assemble and simple to adjust, with up to 21 mm of compensation using additional shims between the track profile and the compensation profile.

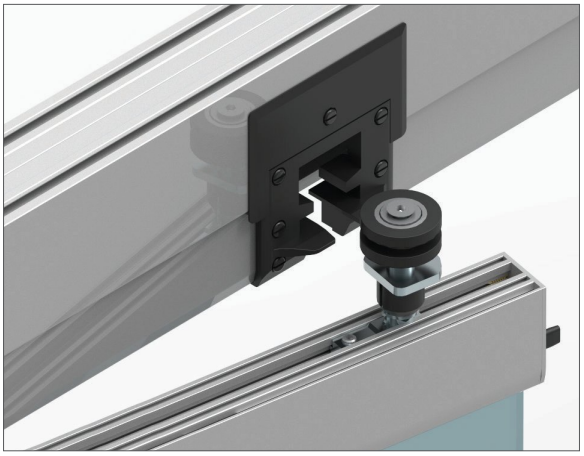

HP-CLAMP - High-pressure clamp The pressure clamp, exclusive to Mc Slide, requires no glass fabrication or silicone, for fast assembly by the manufacturer.

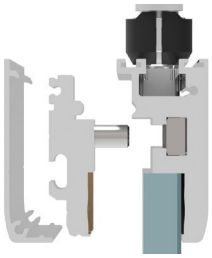

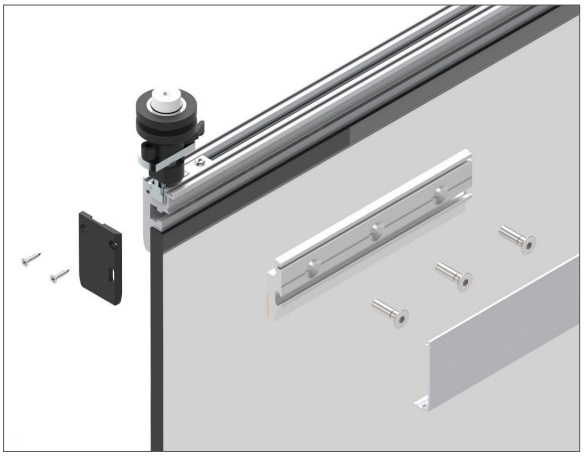

HP-CLAMP CLAMP

panel stacking

The anti-flap system joins the panels together during stacking and locks them once open, with no straps or other devices. Linked together, the panels are secured even against gusts of wind. The first panel swings open, allowing the others to slide in and come to rest in the stacking area. This type of movement ensures maximum clear opening.

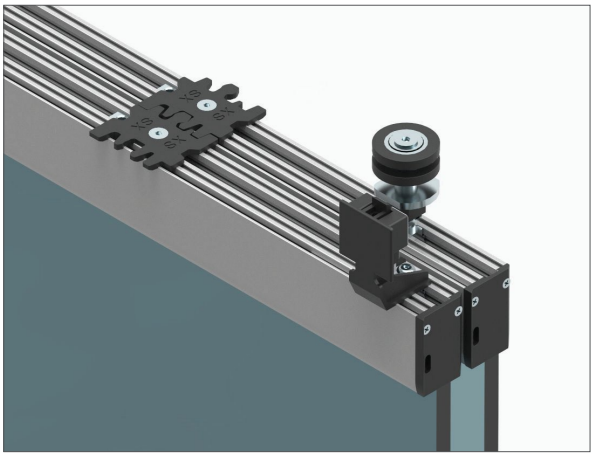





STARGLASS | 4D upgrade

The Starglass | 4D upgrade system ensures easy installation and simple adjustment, compensating for out-of-plumb walls. With the RE-BLOCK® accessory between the two profiles, you can achieve:

- **0 to 9 mm adjustment with:**
  RE-BLOCK®
- **9 to 20 mm adjustment with:**
  RE-BLOCK® + additional shim

VERTICAL COMPENSATION UPRIGHT

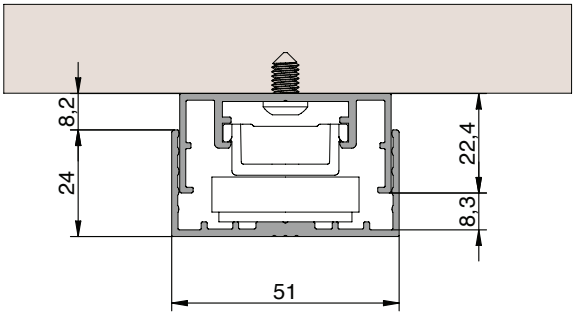

What 4D does:

[1. Compensate for uneven walls] [2. Improve the stability of the installed structure] [3. Avoid trimming or out-of-square components] [4. Simplify installation on uneven walls]

LOWER GUIDE

lower guide

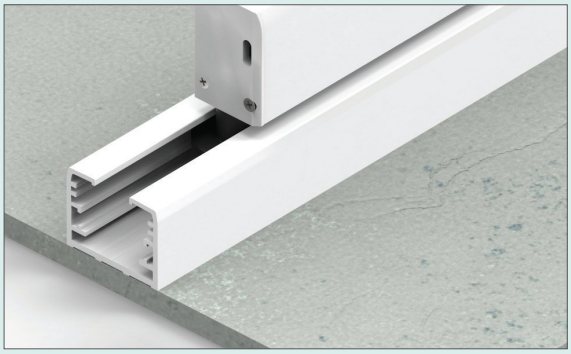

STANDARD H34



VERTICAL ADJUSTMENT UPRIGHT

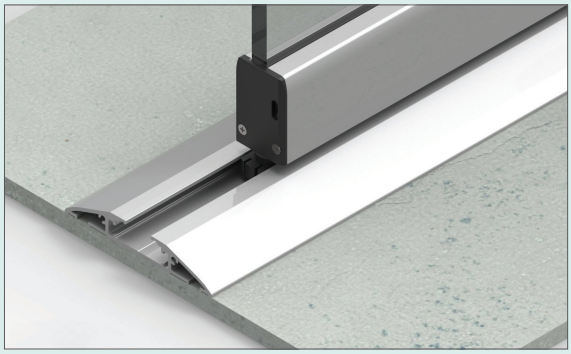

LOWERED H15

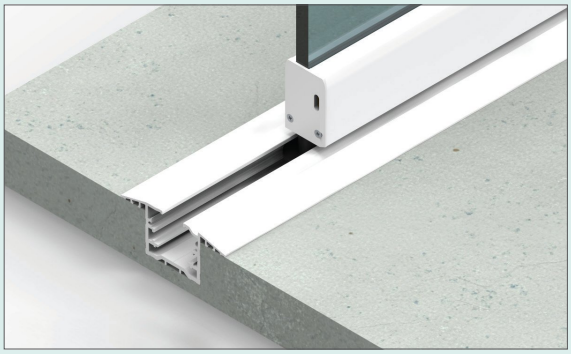

RECESSED

OPENING LEVELING PROFILES



Custom-made, press-bent 3 mm aluminum compensation profile, powder-coated to match the other profiles. Useful for steeply sloped floors and/or ceilings.



Custom-made, press-bent 1.2 mm aluminum compensation profile, powder-coated to match the other profiles. Useful for clearing wall obstructions such as baseboards, pipes, and uneven surfaces.

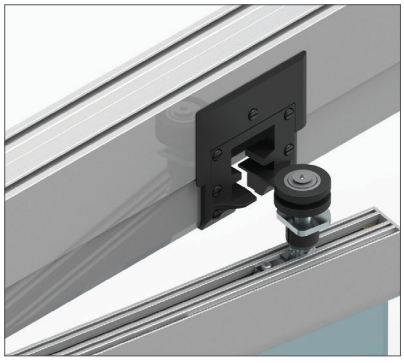

INDEPENDENT PANELS

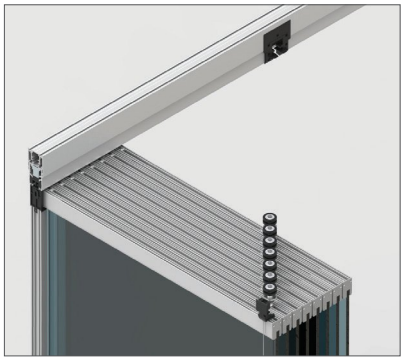

EASY CLEANING

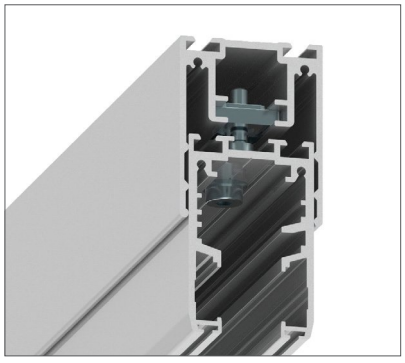

UPPER COMPENSATION PROFILE

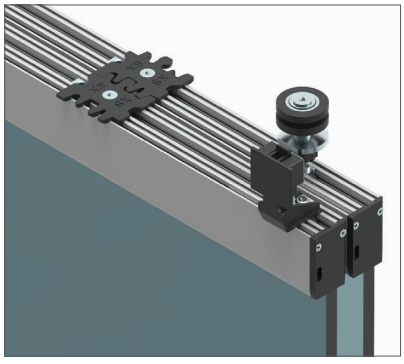

ANTI-FLAP SYSTEM

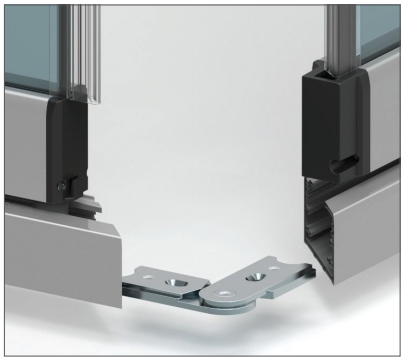

CORNER SOLUTION



ALUMINUM KNOB

Key benefits of Starglass technology

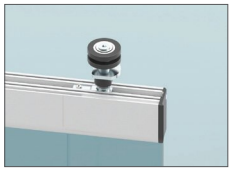

sliding
carriage

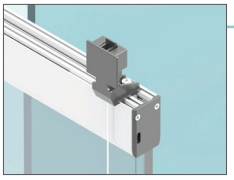

Upper closure
Swing panel

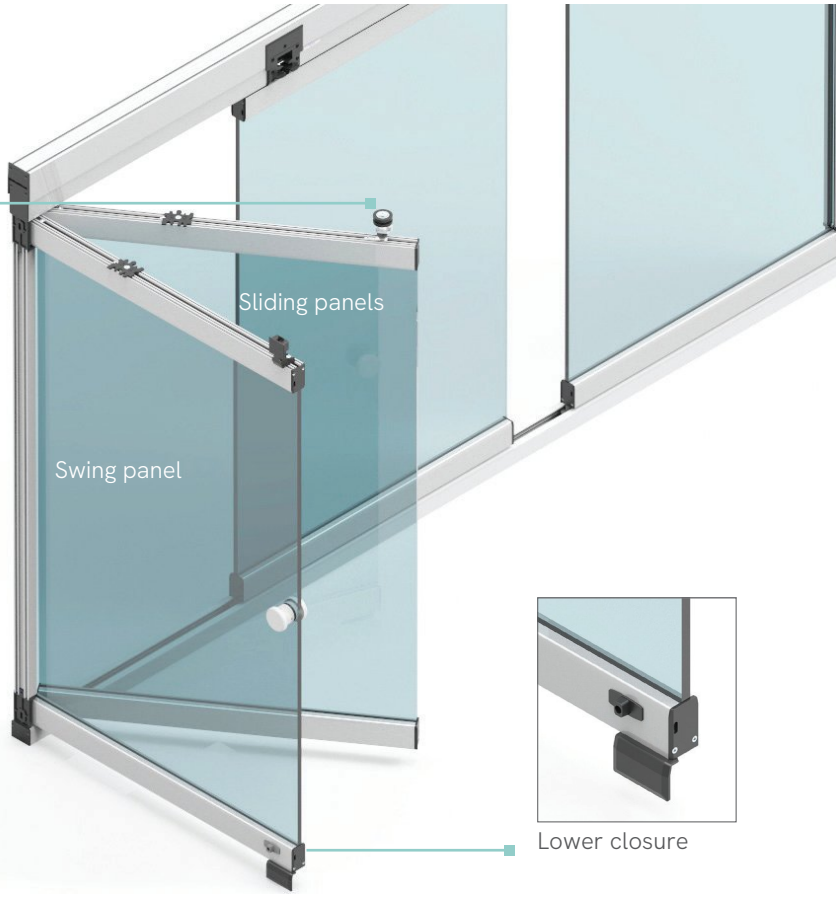

Lower closure

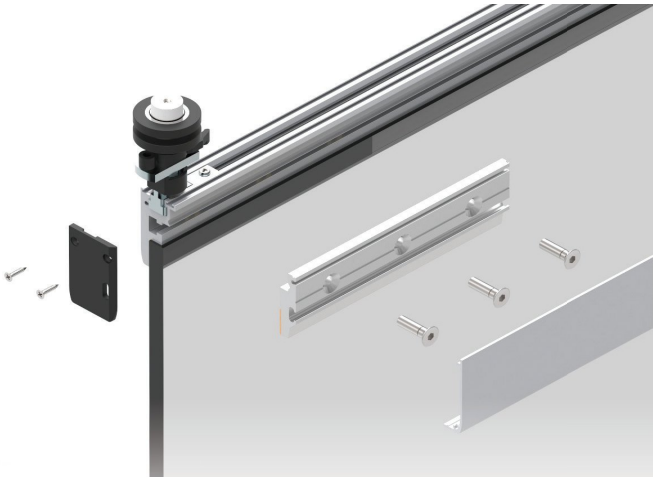

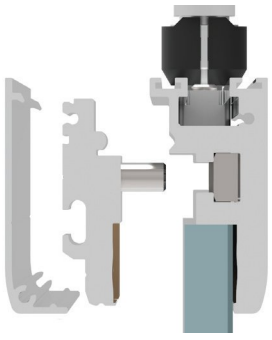

HP-CLAMP TECHNOLOGY

The pressure clamp, exclusive to Mc Slide, requires no glass fabrication or silicone, for fast assembly by the manufacturer.

Starglass | **4D upgrade**

VERTICAL AND LOWER COMPENSATION UPRIGHT

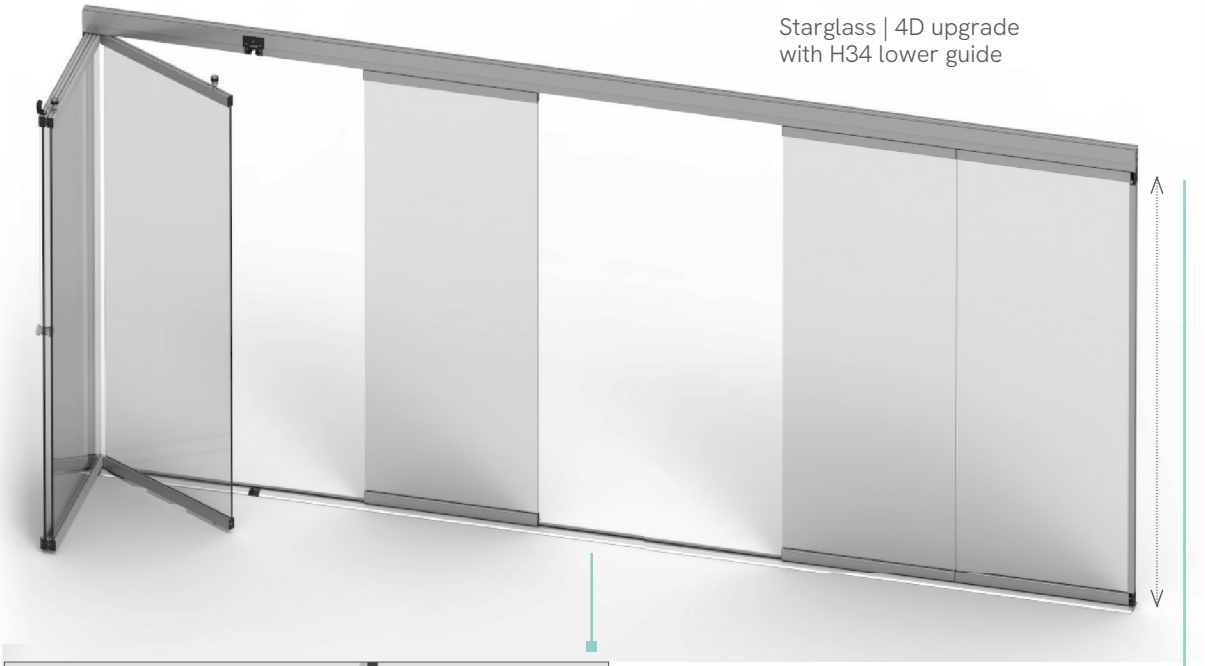

Starglass | 4D upgrade
with H34 lower guide

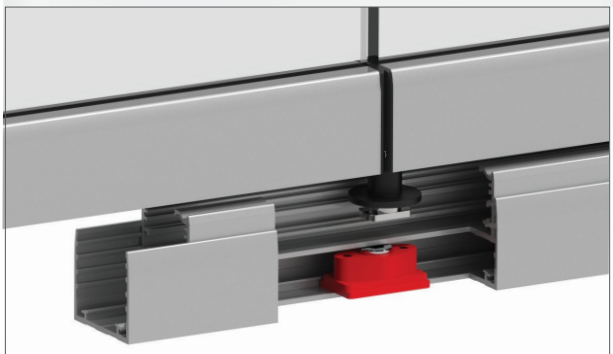

4D LOWER LEVELING PROFILE

Support accessory for easier installation on uneven floors

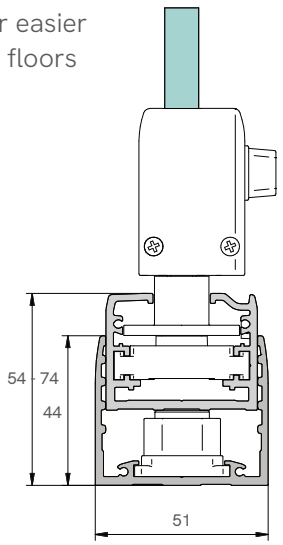

4D VERTICAL COMPENSATION UPRIGHT

Support accessory for easier installation on uneven walls

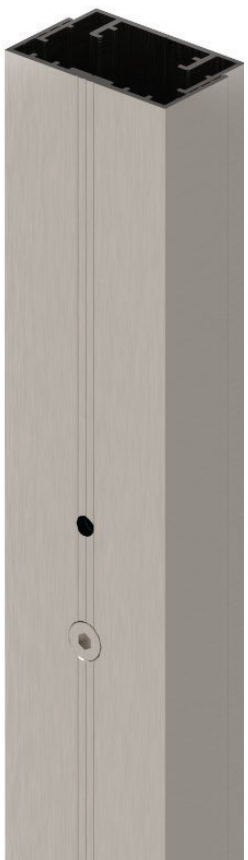

TECHNICAL SPECIFICATIONS

TECHNICAL DRAWINGS
see page 198

STARGLASS

Number of panels	1 ÷ 8 custom solutions
Max panel width	800 mm (31.5")
Max opening height	3,000 mm (118.1")
Max panel weight	50 kg (110 lb)
Glass thickness	10 mm (0.39") (55.2)
Load support	top-hung
Lower guide type	standard = h 66 mm - recessed = h 9 mm
Recommended applications	*terraces, balconies, loggias*

SPECIFICATIONS

Starglass consists of: a series of coplanar panels, at least one of which is a swing panel located in the stacking area where all the panels are collected; the remaining panels slide and, once moved into the stacking area, swing open like a hinged door to leave the opening clear; the system is closed by pivoting the individual panels and then sliding them until they sit side by side; the panels (both swing and sliding) consist of glass panes and aluminum profiles; a lower track and an upper track with a compensation/adjustment system and side uprights; a complete system of seals and brushes for maximum air and water tightness; panel weight is carried by the upper track assembly.

STARGLASS SYSTEM
Wind: up to 120 km/h

BEAUFORT SCALE - UNI EN 13659:2015		
CLASS 1 **Wind: 29 km/h**	Moderate breeze	
CLASS 2 **Wind: 38 km/h**	Fresh breeze	
CLASS 3 **Wind: 48 km/h**	Strong breeze	
CLASS 4 **Wind: 60 km/h**	Near gale	
CLASS 5 **Wind: 76 km/h**	Gale	
CLASS 6 **Wind: 92 km/h**	Strong gale	

VEPA

UNI 11998:2025

"Removable glazed systems - Classification, functional and performance characteristics", which defines the technical and safety requirements for Removable Panoramic Glazing (VEPA).

The standard specifies where to use laminated glass and tempered glass:

- **LAMINATED GLASS:**
  NOT to be used for glazing anchored to a parapet;
- **TEMPERED GLASS:**
  can be used in all applications, including above parapets.

FEATURES

STRUCTURE Extruded primary-alloy aluminum, epoxy-polyester powder-coated, UV-resistant	**PANELS** Clear tempered safety glass 10 mm Laminated glass 55.2 class 1B1 UNI EN 12600	**DIMENSIONS** Single panel max 800 mm Tempered H max 3,000 mm Laminated H max 2,500 mm	**OPENING AND SLIDING** Side sliding and swing opening with stacking area	**OPENING DIRECTION** Inward or outward, side opening (left/right) or both sides for bi-parting openings	**PANEL ADJUSTMENT** + 13 mm / - 5 mm	**FASTENERS** Corrosion-resistant, stainless steel and galvanized	**LOAD SUPPORT** Top-hung: panel weight carried by the upper profile
LOAD CAPACITY Up to 50 kg per panel	**OPENING HARDWARE** Operating knob or lock	**THERMAL INSULATION** Tempered glass 10 mm, g 0.81	**GLASS ACOUSTIC INSULATION** Tempered glass 10 mm | 33 (-2;-3) dB Laminated glass 55.2 | 34 (-1;-3) dB	**ACCESSIBILITY** No restriction to passage, recessed lower profile	**IST. GIORDANO CERTIFICATIONS** Class 6 EN 13659 UNI EN 11998:2025	**MATERIALS** 95% recyclable	

PROFILE COLORS

RAL 9010
Pure white - matte/gloss

RAL 1013
Pearl white - matte/gloss

RAL 9016
Traffic white - matte/gloss

RAL 9005
Deep black - matte

Anodized silver

AKZO NOBEL SW305I
Iron gray - textured

RAL 7016
Anthracite gray - textured/matte

Micaceous gray - textured

RAL 7035
Light gray - matte/gloss

RAL 8017
Chocolate brown - matte/gloss/textured

RAL 1019
Gray beige - matte

AKZO NOBEL SX350F
Corten - textured

GLASS



Tempered



Laminated



Laminated tempered

GLASS FINISH



Extra-clear



Smoked



Satin



FOLDING | CENTRAL

All-glass folding system with central stacking

stable and smooth system

Folding is a folding glass-wall system for panoramic glazing, designed for maximum flexibility and fully open spaces. Available in two configurations, Central (stacking centered on the upper track) and Lateral (side stacking), it lets panels be arranged to suit each architectural requirement. Its versatility makes Folding ideal for enclosing verandas, porches, and commercial spaces, offering protection from the elements, sound insulation, and minimal visual impact. Aluminum profiles and high-quality components ensure durability, safety, and easy maintenance.

folding central

The Central version features floor sockets for locking the panels, making it suitable for large spaces such as restaurants, car showrooms, and shopping centers. The innovative pressure clamp system, housed in a single profile, accepts glass thicknesses of 10 / 10.76 / 12 / 12.76 with no glass fabrication required.



The Folding system encloses large spaces with outstanding ease of operation:

- easy installation with no glass drilling;
- can be combined with the Parking system;
- solutions for large openings;
- single load-bearing profile;
- step-free passage.



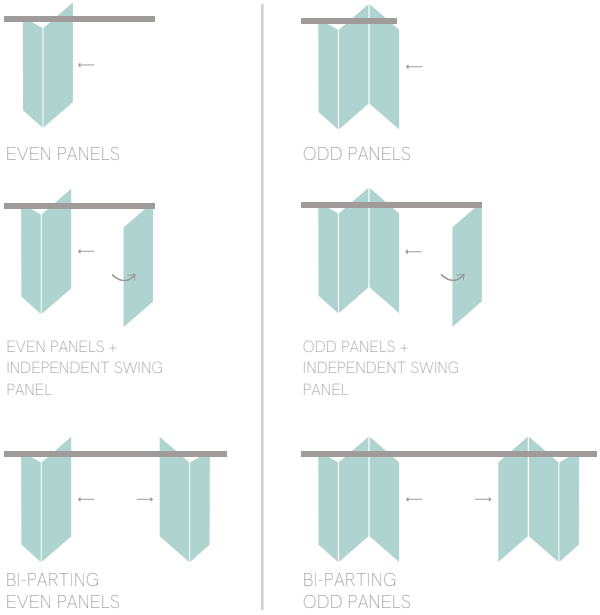

Key benefits of Folding Central technology

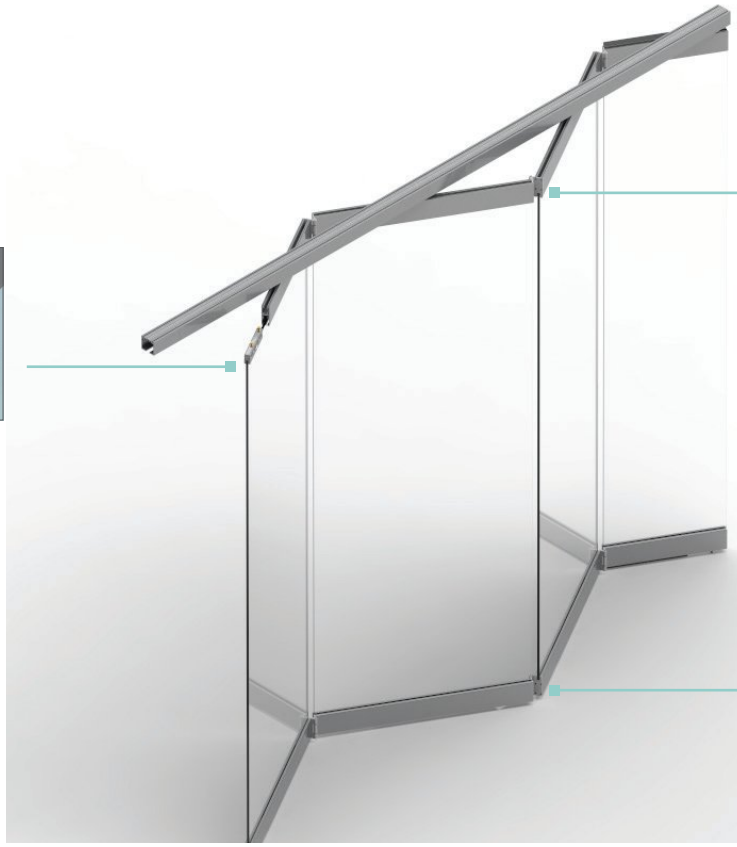



Upper track



Connecting hinge



Lower panel stop

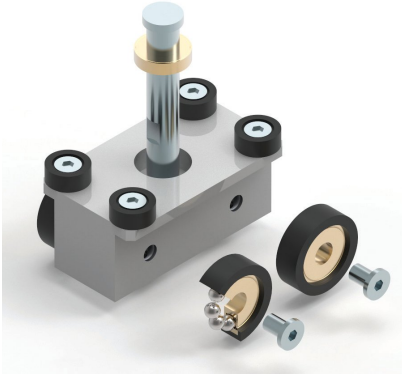

HP ROLLER SLIDING CARRIAGE

The Folding system features special high-performance carriages, each fitted with 4 horizontal-axle Ø 32 mm rollers on Ø 25 mm ball bearings for high load capacity. Four additional rollers prevent any rocking, keeping the system stable and smooth.

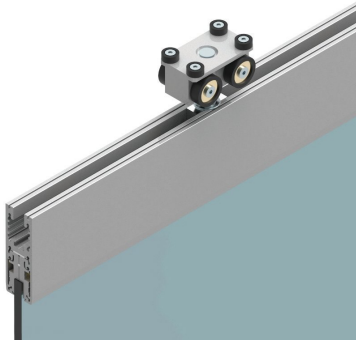

CLAMP AND HP ROLLER

The panels are supported by M12 steel pins joined to the solid aluminum carriage body by a ball bearing that ensures perfect rotation even after years of use. The pressure clamp, a Mc Slide exclusive, eliminates glass fabrication and silicone for quick assembly by the manufacturer.

Folding Central

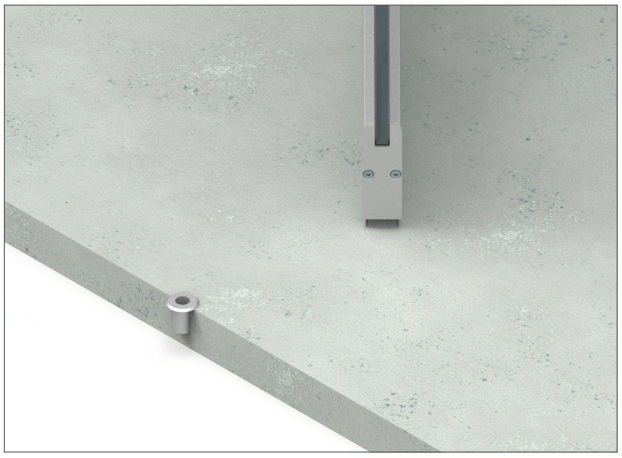

FLOOR SOCKETS

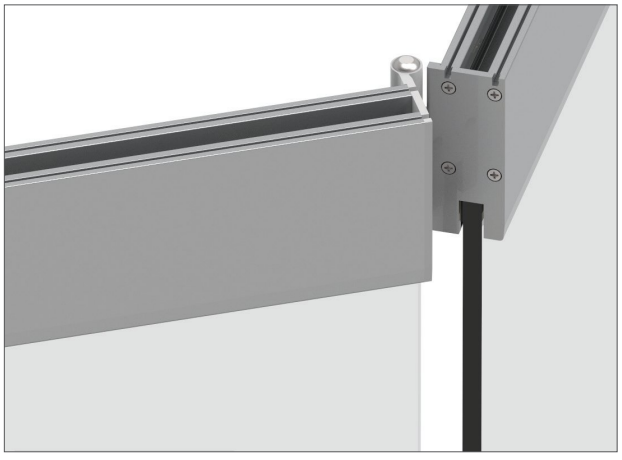

CONNECTING HINGE

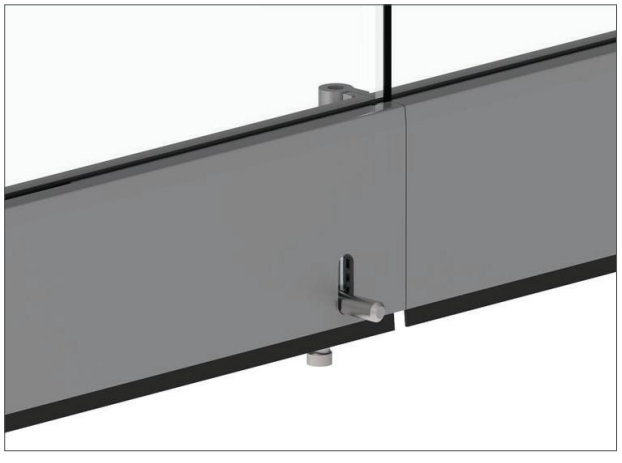

LOWER PANEL STOP

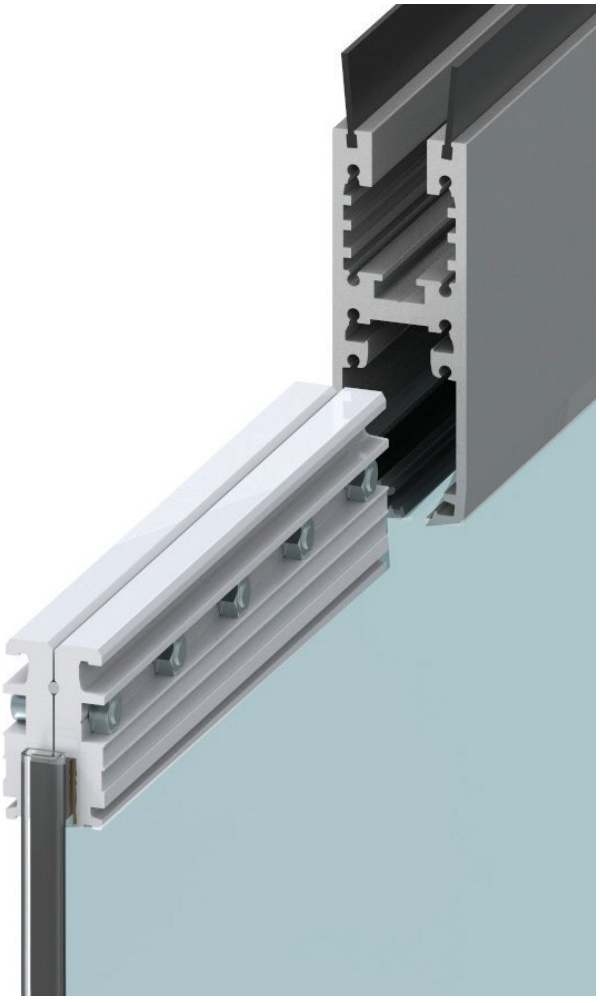

GLASS SUPPORT CLAMP

TECHNICAL SPECIFICATIONS

TECHNICAL DRAWINGS
see page 200

FOLDING CENTRAL

Number of panels	1 ÷ 6.5 custom solutions
Max panel width	1,000 mm (39.4")
Max opening height	3,000 mm (118.1")
Max panel weight	90 kg (198 lb)
Glass thickness	10 - 12 mm (0.39" - 0.47") (55.2 - 66.2)
Load support	top-hung
Lower guide type	floor sockets
Recommended applications	commercial spaces, offices, meeting rooms, and large spaces to divide

SPECIFICATIONS

Folding Central consists of: a series of coplanar panels hinged together that fold like a book to one side of the opening when moved; in Folding Central, the panels stack centered on the upper track; the panels consist of glass (10 to 12.76 mm thick) and aluminum profiles; recessed dust-proof floor sockets; gaskets and brushes complete the system for maximum air and water tightness, and the panel weight is carried by the carriages and the upper track.

FOLDING CENTRAL SYSTEM
Wind: up to 120 km/h

BEAUFORT SCALE - UNI EN 13659:2015		
CLASS 1 **Wind: 29 km/h**	Moderate breeze	
CLASS 2 **Wind: 38 km/h**	Fresh breeze	
CLASS 3 **Wind: 48 km/h**	Strong breeze	
CLASS 4 **Wind: 60 km/h**	Near gale	
CLASS 5 **Wind: 76 km/h**	Gale	
CLASS 6 **Wind: 92 km/h**	Strong gale	

VEPA

UNI 11998:2025

"Removable glazed systems - Classification, functional and performance characteristics", which defines the technical and safety requirements for Removable Panoramic Glazing (VEPA).

The standard specifies where laminated and tempered glass may be used:

LAMINATED GLASS:
NOT to be used for glazing anchored to a parapet;

TEMPERED GLASS:
can be used in all applications, including above parapets.

FEATURES

STRUCTURE Extruded primary-alloy aluminum, epoxy-polyester powder-coated, UV-resistant	**PANELS** **Tempered glass** 10 - 12 mm clear Laminated glass 55.2 - 66.2 clear	**DIMENSIONS** Single panel W min 550 mm max 1,000 mm Tempered H max 3,000 mm	**OPENING AND SLIDING** Side or central bifold opening, stacking centered on the track	**OPENING DIRECTION** Inward or outward, side opening (left/right) or both sides for bi-parting openings	**PANEL ADJUSTMENT** + 6 mm / - 3 mm	**FASTENERS** Corrosion-resistant, stainless and galvanized	**LOAD SUPPORT** Top-hung: panel weight carried by the upper profile
LOAD CAPACITY Up to 90 kg per panel	**OPENING HARDWARE** Handle with lock	**THERMAL INSULATION** Tempered glass 10 mm, g 0.81	**GLASS ACOUSTIC INSULATION** Tempered glass 10 mm | 33 (-2;-3) dB 12 mm | 34 (-0;-2) dB Laminated glass 55.2 | 34 (-1;-3) dB 66.2 | 37 (-1;-3) dB	**ACCESSIBILITY** No restriction to passage, recessed lower profile	**IST. GIORDANO CERTIFICATIONS** Class 6 EN 13659 UNI EN 11998:2025	**MATERIALS** 95% recyclable		

PROFILE COLORS



Anodized silver

GLASS



Tempered

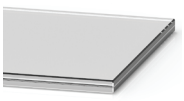

Laminated



Tempered laminated

GLASS FINISH



Extra-clear



Smoked



Satin



FOLDING | LATERAL

all-glass folding wall with side stacking

stable and smooth system

Folding Lateral uses a recessed lower guide, making it ideal for large spaces such as restaurants, car showrooms, and shopping centers. The innovative pressure clamp system, integrated into a single profile, accepts various glass thicknesses with no glass fabrication required.

The Folding system lets you:

- enclose large spaces with outstanding ease of operation, ideal for restaurants and high-traffic public areas such as storefronts and ice cream parlors;
- choose to stack the panels inside or outside with Folding Lateral, or in the center with Folding Central.

folding lateral

The Lateral version features an upper track and a lower guide, making it suitable for large spaces such as restaurants and high-traffic public areas like storefronts and ice cream parlors, enclosing wide areas with outstanding ease of operation. The innovative pressure clamp system, housed in a single profile, accepts glass thicknesses of 10 / 10.76 / 12 / 12.76 with no glass fabrication required.





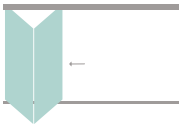

EVEN PANELS

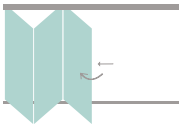

ODD PANELS, LAST ONE ALWAYS HINGED

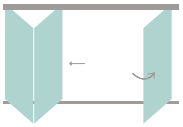

EVEN PANELS + INDEPENDENT SWING PANEL

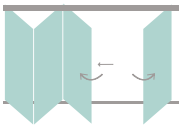

ODD PANELS + INDEPENDENT SWING PANEL

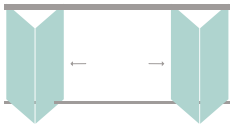

BI-PARTING EVEN PANELS

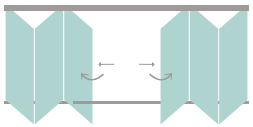

BI-PARTING ODD PANELS

The Folding system encloses large spaces with outstanding ease of operation:

- easy installation with no glass drilling
- can be combined with Parking
- solutions for large openings
- single load-bearing profile
- step-free passage

Key benefits of Folding Lateral technology



Upper track



Connecting hinge



Lower panel stop

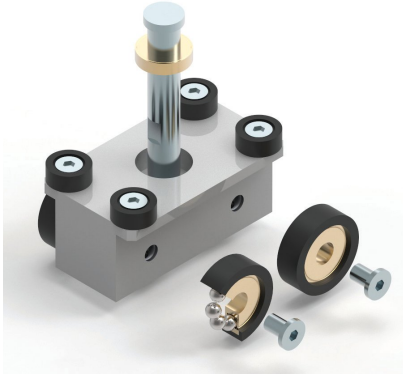

HP ROLLER SLIDING CARRIAGE

The Folding system features special high-performance carriages, each fitted with 4 horizontal-axle Ø 32 mm rollers on Ø 25 mm ball bearings for high load capacity. Four additional rollers prevent any rocking, keeping the system stable and smooth.

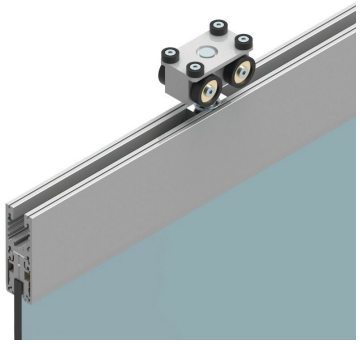

CLAMP AND HP ROLLER

The panels are supported by M12 steel pins joined to the solid aluminum carriage body by a ball bearing that ensures perfect rotation even after years of use. The pressure clamp, a Mc Slide exclusive, eliminates glass fabrication and silicone for quick assembly by the manufacturer.

Folding Lateral



RECESSED GUIDE

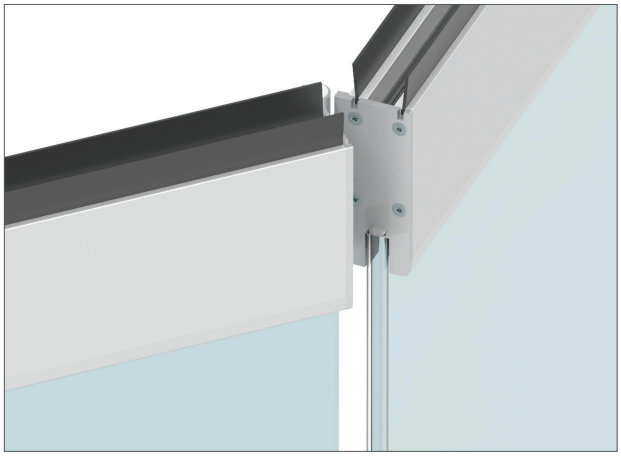

CONNECTING HINGE

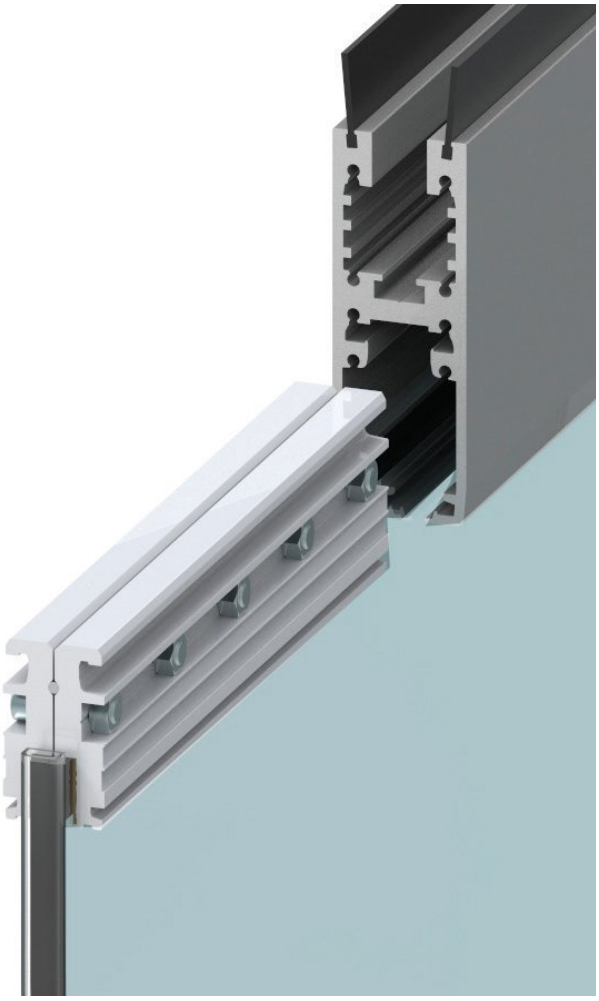

GLASS SUPPORT CLAMP

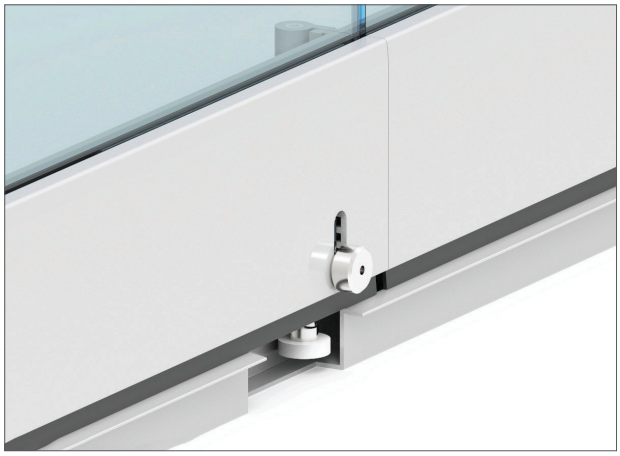

LOWER PANEL STOP

TECHNICAL SPECIFICATIONS

TECHNICAL DRAWINGS
see page 201

FOLDING LATERAL

Number of panels	1 ÷ 6.5 custom solutions
Max panel width	1,000 mm (39.4")
Max opening height	3,000 mm (118.1")
Max panel weight	90 kg (198 lb)
Glass thickness	10 - 12 mm (0.39" - 0.47") (55.2 - 66.2)
Load support	top-hung
Lower guide type	recessed
Recommended applications	commercial spaces, offices, meeting rooms, and large spaces to divide

SPECIFICATIONS

Folding Lateral consists of: a series of coplanar panels hinged together that fold like a book to one side of the opening when moved; in Folding Lateral, the panels stack cantilevered outward from the upper track; the panels consist of glass (10 to 12 mm thick) and aluminum profiles; an upper track and a lower guide; gaskets and brushes complete the system for maximum air and water tightness, and the panel weight is carried by the carriages and the upper track.

FOLDING LATERAL SYSTEM
Wind: up to 120 km/h

BEAUFORT SCALE - UNI EN 13659:2015		
CLASS 1 **Wind: 29 km/h**	Moderate breeze	
CLASS 2 **Wind: 38 km/h**	Fresh breeze	
CLASS 3 **Wind: 48 km/h**	Strong breeze	
CLASS 4 **Wind: 60 km/h**	Near gale	
CLASS 5 **Wind: 76 km/h**	Gale	
CLASS 6 **Wind: 92 km/h**	Strong gale	

VEPA

UNI 11998:2025

"Removable glazed systems - Classification, functional and performance characteristics", which defines the technical and safety requirements for Removable Panoramic Glazing (VEPA).

The standard specifies where laminated and tempered glass may be used:

LAMINATED GLASS:
NOT to be used for glazing anchored to a parapet;

TEMPERED GLASS:
can be used in all applications, including above parapets.

FEATURES

STRUCTURE Extruded primary-alloy aluminum, epoxy-polyester powder-coated, UV-resistant	**PANELS** **Tempered glass** 10 - 12 mm clear Laminated glass 55.2 - 66.2 clear	**DIMENSIONS** Single panel W min 550 mm max 1,000 mm Tempered H max 3,000 mm	**OPENING AND SLIDING** Side or central bifold opening, stacking cantilevered from the track	**OPENING DIRECTION** Inward or outward, side opening (left/right) or both sides for bi-parting openings	**PANEL ADJUSTMENT** + 6 mm / - 3 mm	**FASTENERS** Corrosion-resistant, stainless and galvanized	**LOAD SUPPORT** Top-hung: panel weight carried by the upper profile
LOAD CAPACITY Up to 90 kg per panel	**OPENING HARDWARE** Handle with lock	**THERMAL INSULATION** Tempered glass 10 mm, g 0.81	**GLASS ACOUSTIC INSULATION** Tempered glass 10 mm | 33 (-2;-3) dB 12 mm | 34 (-0;-2) dB Laminated glass 55.2 | 34 (-1;-3) dB 66.2 | 37 (-1;-3) dB	**ACCESSIBILITY** No restriction to passage, recessed lower profile	**IST. GIORDANO CERTIFICATIONS** Class 6 EN 13561 Class 1 EN 12211	**MATERIALS** 95% recyclable		

PROFILE COLORS



Anodized silver

GLASS



Tempered

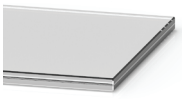

Laminated



Tempered laminated

GLASS FINISH



Extra-clear



Smoked



Satin



PARKING

all-glass stacking system with unlimited panels

innovative pressure clamp system housed in a single aluminum rail

The Parking system is the ideal solution for enclosing large spaces without floor guides, delivering clean aesthetics and the complete removal of architectural barriers. Designed for maximum compositional freedom, it accommodates an unlimited number of large panels, with heights up to 3.5 meters and high load capacity. Elegant, robust, and highly functional, the Parking system combines design and performance, making it perfect for residential, commercial, and professional spaces that demand versatility and reliability.





PARKING

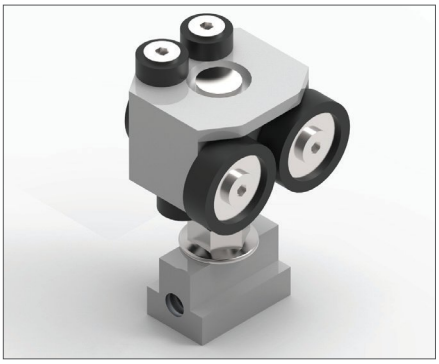

ONE-PIECE CARRIAGE

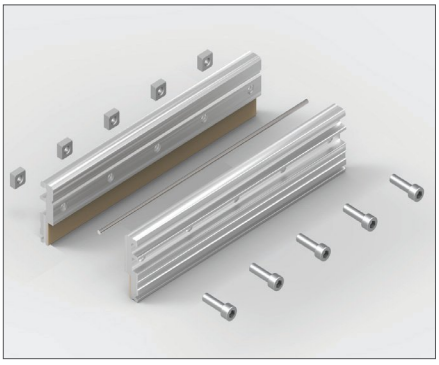

HP-CLAMP CLAMP

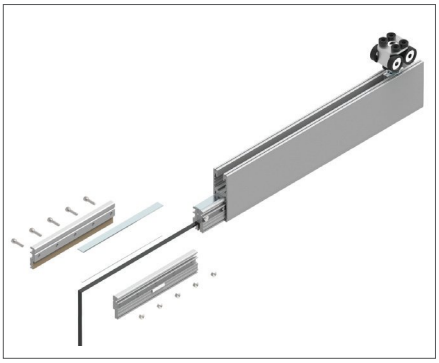

HP-CLAMP CLAMP PROFILE

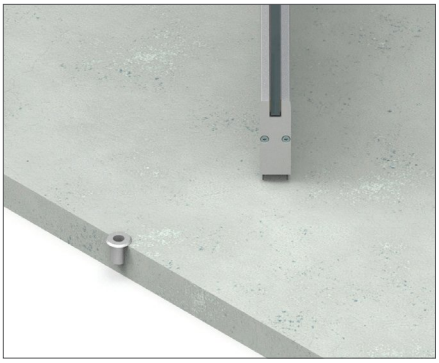

FLOOR SOCKETS

Key benefits of Parking technology

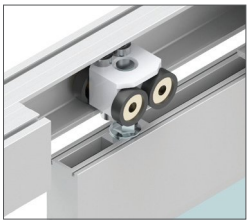

sliding carriage

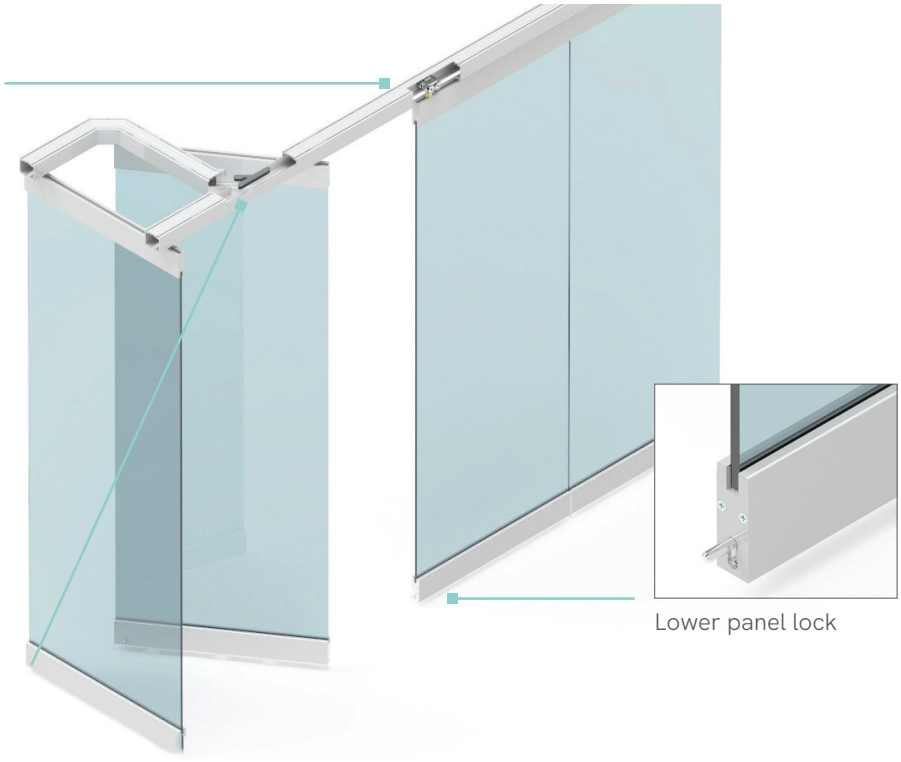

Lower panel lock

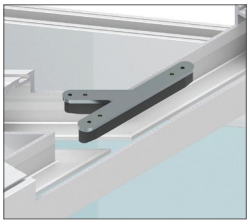

stacking bay release



SLIDING CARRIAGE

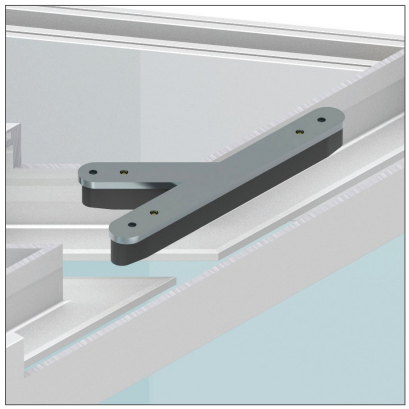

STACKING BAY RELEASE

Parking

THE IDEAL CHOICE FOR THE ULTIMATE IN AESTHETICS, FUNCTIONALITY, AND DESIGN FREEDOM.

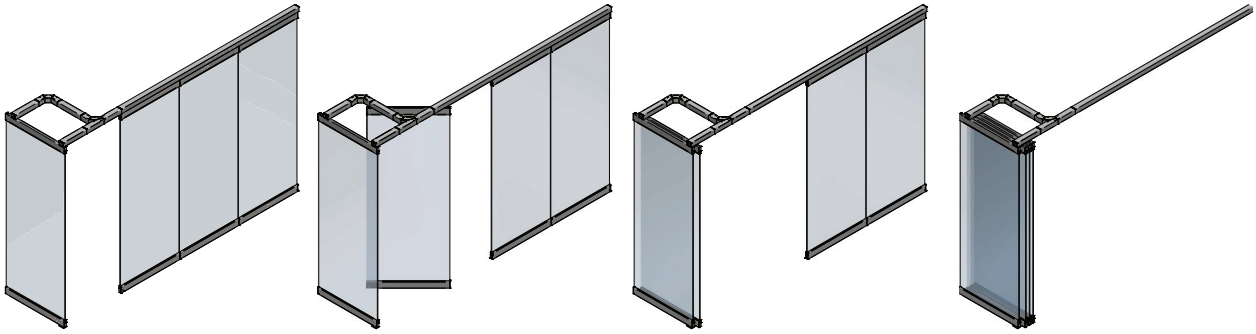

PANEL MOVEMENT

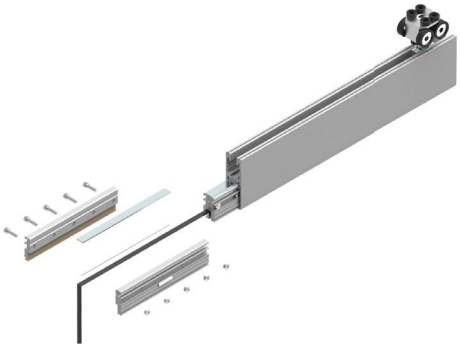

HP-CLAMP CLAMP PROFILE

HP-CLAMP is a certified pressure clamp system that holds the glass securely, preventing any unwanted movement even under heavy use. The HP-CLAMP eliminates glass fabrication and silicone for faster panel assembly.

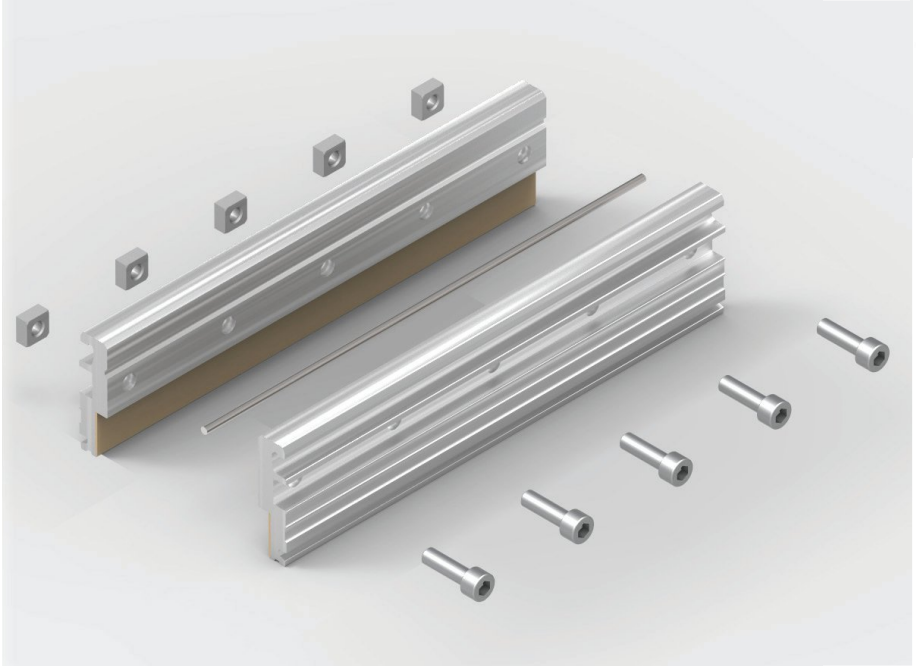

HP-CLAMP CLAMP

TECHNICAL DRAWINGS
see page 202

PARKING

Number of panels	unlimited
Max panel width	1,200 mm (47.2")
Max opening height	3,500 mm (137.8")
Max panel weight	150 kg (331 lb)
Glass thickness	10 - 12 mm (0.39" - 0.47") (55.2 - 66.2)
Load support	top-hung
Lower guide type	floor sockets
Recommended applications	restaurants, public areas, storefronts, shops, ice cream parlors, and airports

SPECIFICATIONS

Parking consists of: a series of independent coplanar panels that, when moved, stack in an upper “stacking bay” on one side of the opening, parallel or perpendicular to the sliding track; the panels consist of 10 to 12 mm glass and aluminum profiles; an upper track and recessed dust-proof floor sockets; gaskets and brushes complete the system for maximum air and water tightness, and the panel weight is carried by the carriages and the upper track.

PARKING	
LOAD TEST clamp pull-out	Weight: 150 kg (331 lb)
LOAD TEST on track	Weight: 110 kg/m (242 lb/m)
LOAD TEST on carriage	Weight: 75 kg (165 lb)

VEPA

UNI 11998:2025

“Removable glazed systems - Classification, functional and performance characteristics”, which defines the technical and safety requirements for Removable Panoramic Glazing (VEPA).

The standard specifies where laminated and tempered glass may be used:

LAMINATED GLASS:
NOT to be used for glazing anchored to a parapet;

TEMPERED GLASS:
can be used in all applications, including above parapets.

FEATURES

STRUCTURE Extruded primary-alloy aluminum, epoxy-polyester powder-coated, UV-resistant	**PANELS** **Tempered glass** 10 - 12 mm clear Laminated glass 55.2 - 66.2 clear	**DIMENSIONS** Single panel W min 600 mm max 1,200 mm Tempered H max 3,500 mm	**OPENING AND SLIDING** Stacking bay, first opening panel always hinged	**OPENING DIRECTION** Inward or outward, side opening (left/right) or both sides for bi-parting openings	**PANEL ADJUSTMENT** + 6 mm / - 3 mm	**FASTENERS** Corrosion-resistant, stainless and galvanized	**LOAD SUPPORT** Top-hung: panel weight carried by the upper profile
LOAD CAPACITY Up to 150 kg per panel	**OPENING HARDWARE** Handle with lock	**THERMAL INSULATION** Tempered glass 10 mm, g 0.81	**GLASS ACOUSTIC INSULATION** Tempered glass 10 mm | 33 (-2;-3) dB 12 mm | 34 (-0;-2) dB Laminated glass 55.2 | 34 (-1;-3) dB 66.2 | 37 (-1;-3) dB	**ACCESSIBILITY** No restriction to passage, recessed floor sockets	**IST. GIORDANO CERTIFICATIONS** Class 6 EN 13561 Class 1 EN 12211	**MATERIALS** 95% recyclable	

PROFILE COLORS



Anodized silver

GLASS



Tempered

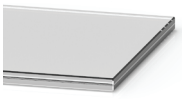

Laminated



Tempered laminated

GLASS FINISH



Extra-clear



Smoked



Satin



Line
Interior

TECHNICAL GUIDANCE

	FUSION	MAGLEV
	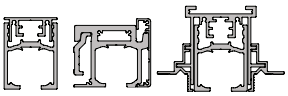	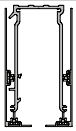
Distance between doors	7 mm	//
Door width	Min. 550 mm - Max 1,500 mm	Max 1,900 mm
Max opening height	3,000 mm	3,000 mm
Max door weight	120 kg	200 kg
Glass thickness	6 - 8 - 10 mm (33.2 - 44.2)	8 - 10 mm (44.2 - 55.2)
Damper	65 - 90 - 120 kg	100 mm - 50 kg 140 mm - 100 kg 140 mm - 150 kg 140 mm - 200 kg
Door adjustment	+ 2 / - 7 mm	± 5 mm
Telescopic operation	YES	NO
Recommended applications	ideal solutions for walk-in closets, living areas, and high-end room dividers	residential, domestic, and work environments

interior line

FRONTAL	PRATIK	CASPER	SKY
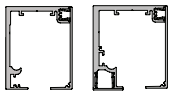	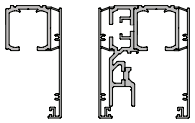	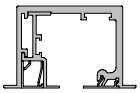	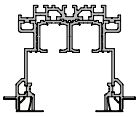
12 mm	16 mm	21 mm	10 mm
1 Stop&Slide brake: 385 - 530 - 625 mm 2 Stop&Slide brakes: 600 - 790 - 905 mm	1 Stop&Slide brake: 500 - 560 - 600 mm 2 Stop&Slide brakes: 625 - 780 - 825 mm	1 Stop&Slide brake: 585 - 610 mm 2 Stop&Slide brakes: 830 - 880 mm	1 Stop&Slide brake: 500 - 560 - 600 mm 2 Stop&Slide brakes: 625 - 780 - 825 mm
3,000 mm	3,000 mm	3,000 mm	3,000 mm
65 - 90 - 120 kg	120 kg	150 kg	120 kg
8 - 10 - 12 mm (44.2 - 55.2 - 66.2)	8 - 10 - 12 mm (44.2 - 55.2 - 66.2)	8 - 10 - 12 mm (44.2 - 55.2 - 66.2)	10 mm
65 - 90 - 120 kg	65 - 90 - 120 kg	70 - 90 kg	65 - 90 - 120 kg
± 3 mm	± 6 mm	± 5 mm	± 5 mm
NO	YES	NO	YES
ideal for partition doors, room separation, and office layouts with sliding partitions	ideal for interior partition doors and telescopic door solutions	ideal solutions for living areas and spaces with a suspended ceiling	ideal solutions for living areas and spaces with a suspended ceiling that require telescopic doors





FUSION

framed sliding door system

the freedom to divide,
the elegance to unite

The Fusion range offers framed sliding door systems designed to divide rooms with a light touch and create walk-in closets with a refined aesthetic. The line's versatility allows fully customized configurations: from exposed sliding profiles to systems concealed in suspended ceilings, to independent or telescopic door versions. All Fusion solutions feature the Stop&Slide soft-close system for smooth, silent, controlled movement, enhancing perceived quality and comfort in every application.

"Versatile, fully customizable sliding solutions"

Designed to suit different lifestyles and the most advanced design requirements, the Fusion range lets you define your space with elegance, lightness, and compositional freedom.

a framed system designed for walk-in closets, living areas, and high-end room dividers



Why choose Fusion framed doors?

Fusion framed doors are the ideal solution for a balance of aesthetics, functionality, and design flexibility. Their frame provides stability and solidity while keeping a light, elegant design that blends into modern, refined, and perfectly coordinated interiors. Designed to adapt to multiple configurations, Fusion doors offer the compositional freedom to interpret every space creatively: striking walk-in closets, light dividers between living areas, fluid passageways, and custom layouts. Compatibility with suspended, recessed, and telescopic tracks or independent doors meets a wide range of architectural needs without compromising aesthetic consistency.

THE FUSION SYSTEM OFFERS:

- easy assembly;
- easy installation and adjustment;
- door attachment system with built-in provision for a pivot hinge and its locking cap;
- quick-fit, screwless finishing cap for a flawless finish.





Key benefits of Fusion technology



PRECISION FIX TECHNOLOGY

The Fusion upper track is installed and adjusted via integrated adjustment points. On uneven ceilings, the adjustment device built into the sliding profile compensates for dimensional tolerances and ensures correct system alignment. This mechanism keeps the installation continuous and ensures full system compatibility on irregular or less-than-flat mounting surfaces.

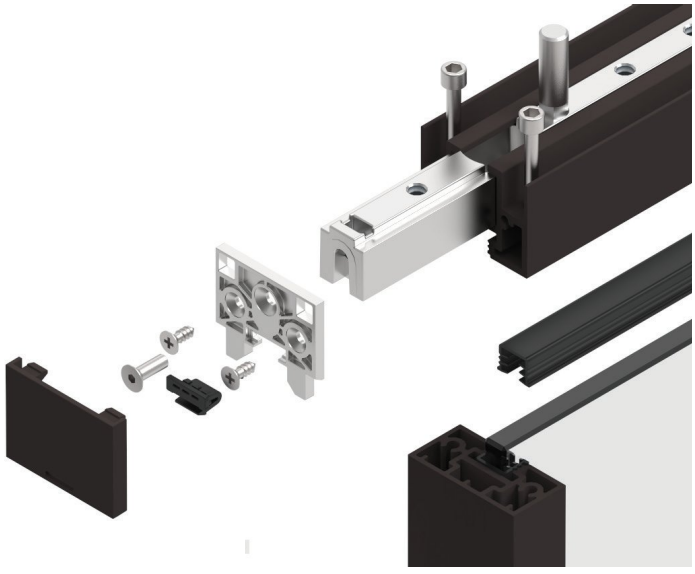

FLEXI SET TECHNOLOGY

Framed door with a clean geometric profile, designed for quick assembly through simplified connections. Prepared for a pivot hinge with a built-in locking cap. The front is finished with a quick-fit, screwless trim cap for a clean, linear finish.

The Fusion system offers three installation types: ceiling, suspended ceiling, and wall

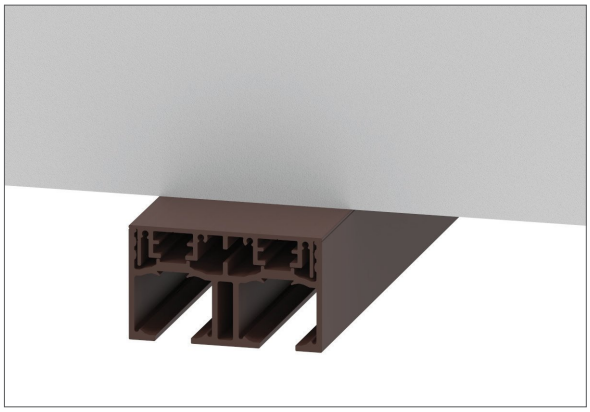

CEILING INSTALLATION

The Fusion system is ideal for ceiling installation where a dedicated recess is available, offering a discreet solution perfectly integrated into fixed-glass configurations, where it ensures stability, clean lines, and an elegant, minimal finish.

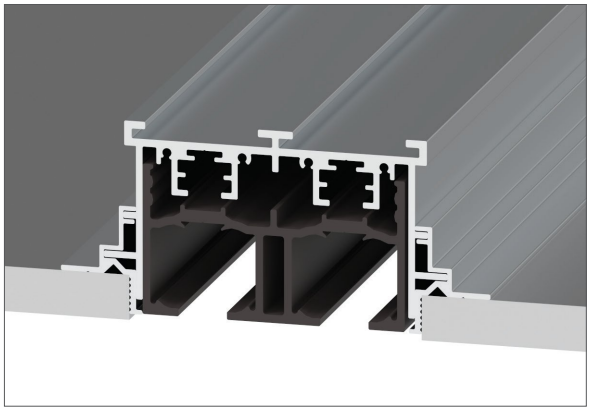

SUSPENDED CEILING INSTALLATION

The Fusion system is designed for suspended-ceiling installation and is the ideal solution for drywall ceilings where the profiles are to be fully concealed.

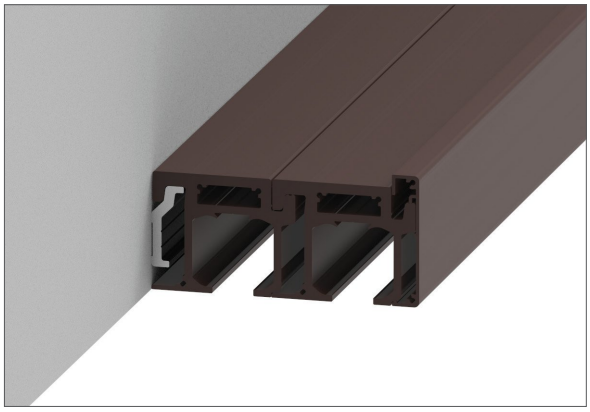

WALL INSTALLATION

The Fusion system is designed for wall installation and is the ideal solution for small openings that do not allow ceiling installation.

TECHNICAL SPECIFICATIONS

TECHNICAL DRAWINGS
see page 204

FUSION

Door width	Min. 550 mm (21.7") - Max 1,500 mm (59.1")
Max opening height	3,000 mm (118.1")
Max door weight	120 kg
Glass thickness	6 - 8 - 10 mm (33.2 - 44.2)
Damper	65 - 90 - 120 kg
Distance between doors	7 mm
Door adjustment	+ 2 / - 7 mm
Recommended applications	ideal for living areas, high-end room dividers, and walk-in closets

FEATURES

STRUCTURE Extruded primary-alloy aluminum, epoxy-polyester powder-coated, UV-resistant	**DOORS** Tempered glass 6 - 8 - 10 mm clear Laminated glass 33.2 - 44.2 clear	**DIMENSIONS** Single door W min 550 mm Tempered H max 3,000 mm	**DAMPER** Stop&Slide, featuring integrated braking technology for stable, silent, vibration-free movement	**OPENING** Side sliding, flush with ceiling	**DOOR ADJUSTMENT** + 2 / - 7	**FASTENERS** Corrosion-resistant, stainless and galvanized
LOAD CAPACITY Up to 120 kg per door	**OPENING HARDWARE** Adhesive glass handle or handle with lock	**THERMAL INSULATION** Tempered glass 6 - 8 - 10 mm	**GLASS ACOUSTIC INSULATION** Tempered glass 6 mm | 31 (-2;-3) dB 8 mm | 32 (-2;-3) dB 10 mm | 33 (-2;-3) dB Laminated glass 33.2 | 32 (-1;-3) dB 44.2 | 33 (-1;-3) dB	**ACCESSIBILITY** No restriction to passage	**LOAD SUPPORT** Top-hung: door weight carried by the upper profile	**MATERIALS** 95% recyclable

MOUNTING OPTIONS:

Three different mounting options are available:
- **wall-mounted;**
- **ceiling-mounted;**
- **recessed;**
  - a click-fit rail system for quick and intuitive assembly;
  - easy installation, with no need for complex tools;
  - a structure designed to ensure stability and precision over time;
  - a sleek, minimalist design.

CEILING-MOUNTED | 3-RAIL

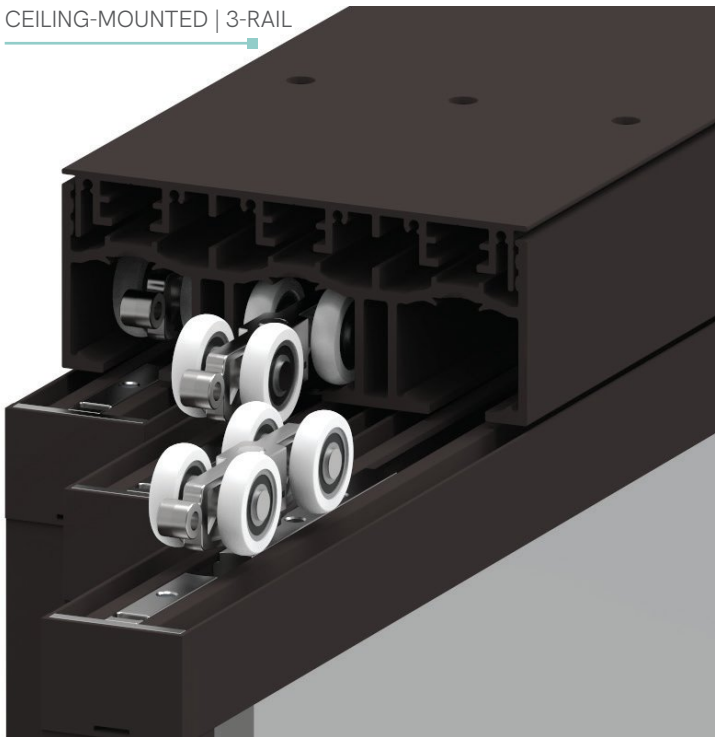



EXCLUSIVE LOCK FOR FUSION



FLY ADHESIVE HANDLE



EXCLUSIVE STRIKE PLATE FOR FUSION

TYPE OF GLASS



TEMPERED



LAMINATED



TEMPERED LAMINATED

GLASS FINISH



EXTRA-CLEAR



SMOKED



SATIN

PROFILE COLORS



White

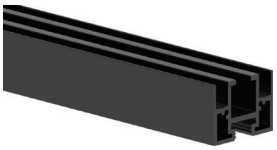

Black

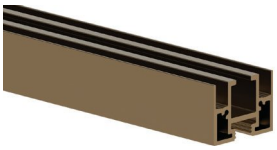

Bronze



Dark Brown

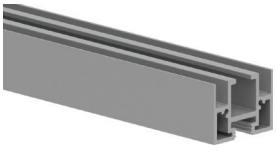

Anodized silver



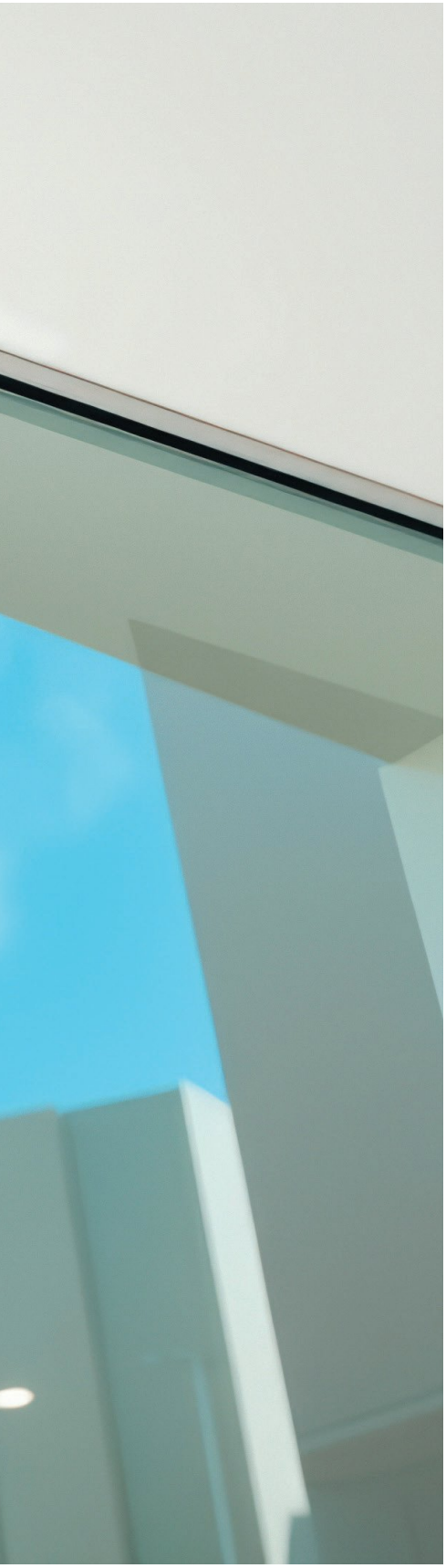

MAGLEV

all-glass magnetic levitation sliding door system

doors that float as light as a feather

Imagine a door that moves as if floating on air. Maglev is an innovative system that uses special magnets to lift the weight of the door, making it incredibly light. With this technology, the door slides without friction, as if suspended, slowed only by its own weight. A simple gesture activates the levitation, and a gentle push sets the door in motion.

"Maglev makes door movement much lighter and smoother than traditional systems"

Minimal effort, maximum effect: the sensation of sliding a door that seems to weigh nothing.



MAGLEV

the invisible force that makes the impossible possible

Why choose magnetic levitation?

UNLIMITED SLIDING
Maglev glides with zero friction, delivering a smoothness that traditional wheeled systems cannot match. Tested on doors weighing up to 200 kg, it ensures consistent performance even under the most extreme conditions. Only 2 kg of thrust moves a 200 kg door: an extraordinary result that expands design possibilities.

UNCOMPROMISING SAFETY
Maglev is inherently safe: the magnetic field is fully confined within the runner, eliminating external leakage and induced magnetism. The system can therefore be used even in its lower section with complete peace of mind in the home. Stray magnetic field levels are well below the limits set by European directives.

CERTIFIED RELIABILITY
The system is designed to exceed corrosion resistance requirements and is certified for 100,000 cycles of use. Salt-spray resistance has been tested for 1,000 hours, ensuring high performance even in demanding environments.

ADVANCED MODULARITY
With Maglev technology, the number of runners can be matched to the weight of the door. Unlike traditional carriages, magnetic levitation distributes the load evenly across the runners, allowing wider openings, minimal profiles, and greater design freedom.

EASY, GUIDED INSTALLATION
Maglev is designed for simple, safe, and quick installation. The runners are assembled with dedicated accessories that guide the system into the profile, while integrated connectors simplify track mounting.



MAGLEV noELETTRIC

The Mc Slide Maglev system guarantees constant magnetic attraction and smooth, progressive damping throughout the entire stroke, ensuring flawless movement at every stage. The ultra-light manual sliding action, combined with soft closing at the ends, offers a surprisingly comfortable user experience. Among its exclusive features is the magnetic self-closing mechanism, completely free of mechanical components: a solution that increases reliability and minimizes maintenance. The integrated magnetic brake controls the sliding speed and protects the door from impact, ensuring safety, durability, and a premium feel.

Coated sliding profile for maximum quietness



MAXIMUM SILENCE

MAGLEV MAKES DOOR MOVEMENT MUCH LIGHTER AND SMOOTHER
THAN TRADITIONAL SYSTEMS



MAGLEV

tested to UNI EN 1527:2022 for 100,000 cycles

MOUNTING SYSTEMS

- Maglev levitation sliding system
- Coated sliding profile for maximum silence
- **Magnetic soft closing**
- Mounting options: ceiling, recessed, or wall-mounted, single-track
- Special low-noise bottom guide profile



The Maglev system was created to shape spaces and accompany the movement of light. Designed to divide spaces with dramatic, large-scale doors, it transforms every opening and closing gesture into a fluid and natural experience. Maglev magnetic levitation lets multiple elements float without contact, through the coupling of a magnetic slider and a steel guide. Next-generation permanent magnets support the load with no energy input, eliminating friction and component wear. Movement is completely weightless, overcoming the limitations of wheels. Loads and systems glide smoothly, efficiently, and reliably, making the Maglev system ideal for industrial and automation applications and setting new standards in the industry.

TECHNICAL SPECIFICATIONS

TECHNICAL DRAWINGS
see page 208

MAGLEV

Max door width	1,900 mm (74.8")
Max opening height	3,000 mm (118.1")
Max door weight	200 kg (441 lb)
Glass thickness	8 - 10 mm (0.31" - 0.39") (44.2 - 55.2)
Load support	top-hung
Lower guide type	Fixed guide
Recommended applications	residential, domestic, and work environments

TECHNICAL SPECIFICATIONS

STRUCTURE Extruded primary-alloy aluminum, epoxy-polyester powder-coated, UV-resistant	**DOORS** Tempered glass 8 - 10 mm clear Laminated glass 44.2 - 55.2 clear	**DIMENSIONS** Single door W min 700 mm max 1,900 mm Tempered H max 3,000 mm	**DAMPER STROKE** 100 mm (50 kg) 140 mm (100 kg) 140 mm (150 kg) 140 mm (200 kg)	**SLIDING FORCE** Door 50 kg: 0.5N Door 100 kg: 1N Door 150 kg: 1.5N Door 200 kg: 2N	**DOOR ADJUSTMENT** ± 5 mm	**FASTENERS** Corrosion-resistant, stainless and galvanized
LOAD CAPACITY Up to 200 kg per door	**OPENING HARDWARE** Adhesive handle	**THERMAL INSULATION** Tempered glass 10 mm, g 0.81	**GLASS ACOUSTIC INSULATION** Tempered glass 8 mm | 32 (-2;-3) dB 10 mm | 33 (-2;-3) dB Laminated glass 44.2 | 33 (-1;-3) dB 55.2 | 34 (-1;-3) dB	**ACCESSIBILITY** No restriction to passage	**MATERIALS** 95% recyclable	**LOAD SUPPORT** Top-hung: door weight carried by the upper profile

PROFILE COLORS

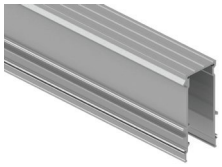

Anodized silver

GLASS



TEMPERED



LAMINATED



TEMPERED LAMINATED

GLASS FINISH



EXTRA-CLEAR



SMOKED



SATIN

Maglev offers the following mounting options:

- ceiling, recessed, or wall-mounted, single-track;
- maximum load capacity 200 kg;
- magnetic levitation sliding;
- coated sliding profile for maximum silence;
- magnetic soft closing.

SLIDING FORCE:

- 50 kg door: 0.5N;
- 100 kg door: 1N;
- 150 kg door: 1.5N;
- 200 kg door: 2N.

DAMPER STROKE:

- 100 mm (50 kg);
- 140 mm (100 kg);
- 140 mm (150 kg);
- 140 mm (200 kg).
- Vertical system adjustment ± 5 mm;
- Vertical door adjustment via M8 pins;
- Opening force 10N.







FRONTAL

synchronized sliding door system and partition wall profiles

stable and vibration-free

Frontal is a sliding system with a compact, refined design, created to deliver versatile, high-performance solutions in tight spaces. All adjustments are made from the front, simplifying installation and maintenance even in complex settings. The system features ultra-quiet shielded bearings and the exclusive premium Stop&Slide damping system, with an oil piston and dual springs, for smooth, stable, and vibration-free sliding. The result: a comfortable user experience and greater long-term durability.

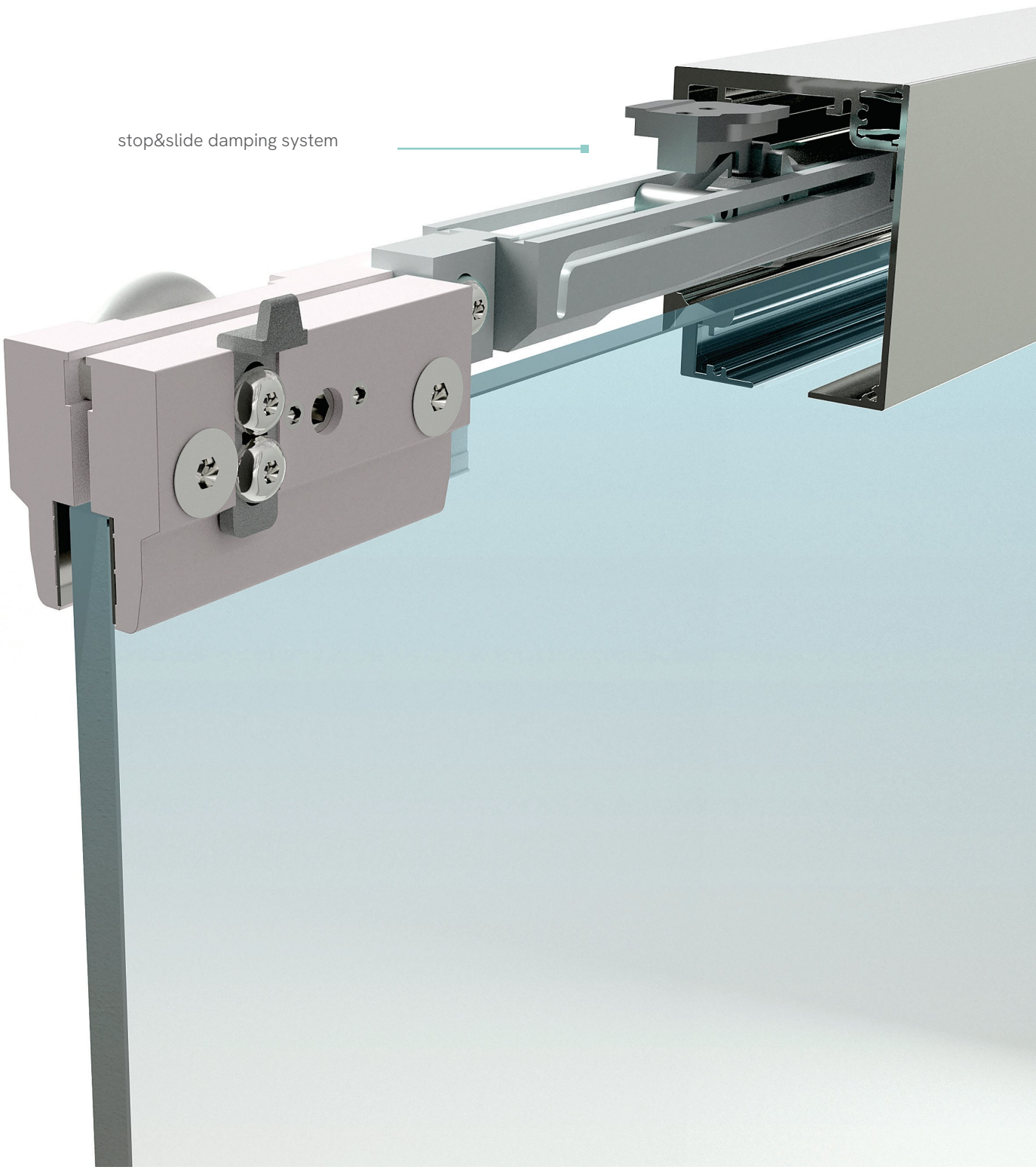
stop&slide damping system

Stop&Slide
ABS safety system

COMPACTNESS, CLEAN AESTHETICS, PERFORMANCE

Frontal is the ultimate front-adjustable solution: a system in which the entire design is compact and linear, taking up very little space and adapting easily to the end user's different needs.



ESSENTIAL DESIGN
- Clean, minimalist aesthetics
- Minimal front projection

4 FINISHES AVAILABLE
- Anodized silver
- Anodized stainless steel
- Anodized black
- White

VERSATILITY OF USE
- Wide range of configurations
- Versions with or without fixed glass
- Ideal for a wide range of spaces and architectural solutions

STRENGTH AND SAFETY
- Adjustable pressure clamping system
- Integrated anti-derailment mechanism
- Solid and highly reliable structure

SILENT SLIDING
- Shielded bearings for smooth movement
- Standard Stop&Slide damping system
- Greater comfort in daily use



FRONTAL | OFFICE

synchronized sliding door system and partition wall profiles, ideal for offices

stable and vibration-free

Frontal Office is a compact, professional sliding system designed to deliver versatile, high-performance solutions for modern workspaces. Fully front-accessible adjustments simplify installation and maintenance, making the system ideal for executive offices, general office areas, and reception areas where accessibility is essential. Ultra-quiet shielded bearings ensure smooth movement even where acoustic comfort is a priority. The exclusive Stop&Slide damping mechanism, with an oil piston and dual springs, delivers controlled, stable, and vibration-free sliding. The result is an exceptionally comfortable user experience, longer system life, and a better working environment.

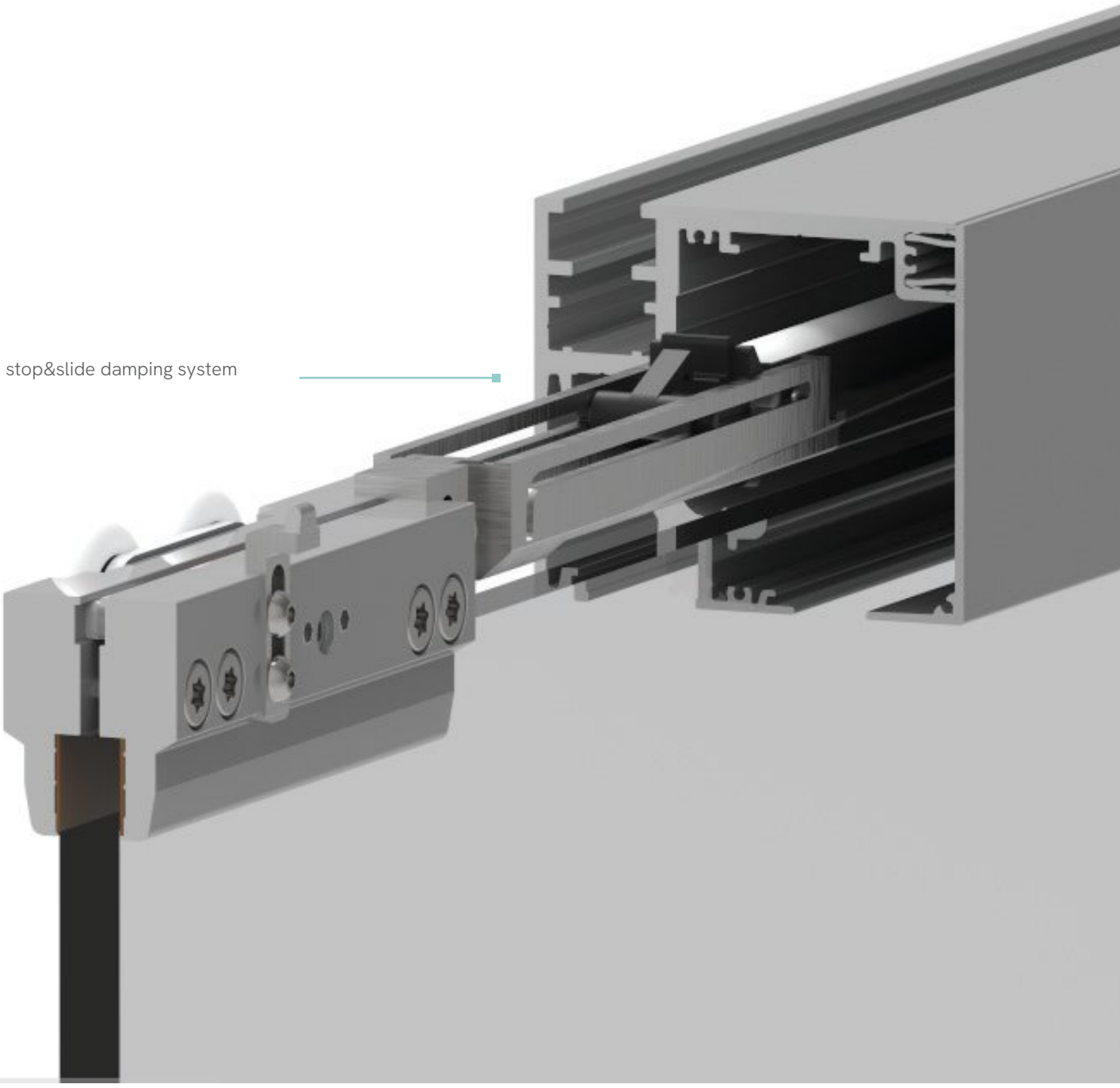
stop&slide damping system

frontal office

Stop&Slide
ABS safety system

EFFICIENCY, CLEAN LINES, PERFORMANCE

Frontal Office is the ideal solution for organizing workspaces: a sliding system with one or more fixed panels, developed to deliver maximum functionality in a compact footprint while ensuring visual order, ergonomics, and integration with the varied needs of the workplace.

LINEAR AESTHETICS

- Clean and professional aesthetics.

4 FINISHES AVAILABLE

- Anodized silver.
- Anodized stainless steel.
- Anodized black.
- White.

VERSATILITY OF USE

- Wide range of modular configurations.
- Solutions for single and shared workstations.
- Suitable for general offices, executive offices, and reception areas.

STRENGTH AND SAFETY

- Adjustable pressure clamping system.
- Integrated anti-derailment mechanism.
- Solid and highly reliable structure.

SILENT SLIDING

- Shielded bearings for smooth movement.
- Standard Stop&Slide damping system.
- Greater comfort in daily use.



TECHNICAL DRAWINGS
see pages 209 - 210

FRONTAL and FRONTAL OFFICE

Gap between doors	12 mm
Max door width	1 Stop&Slide brake: 385 - 530 - 625 mm (15.2 - 20.9 - 24.6 in) 2 Stop&Slide brakes: 600 - 790 - 905 mm (23.6 - 31.1 - 35.6 in)
Max opening height	3,000 mm (118.1")
Max door weight	65 - 90 - 120 kg
Glass thickness	8 - 10 - 12 mm (44.2 - 55.2 - 66.2)
Load support	Top-hung
Recommended applications	ideal for partition doors, room dividers, and office layouts

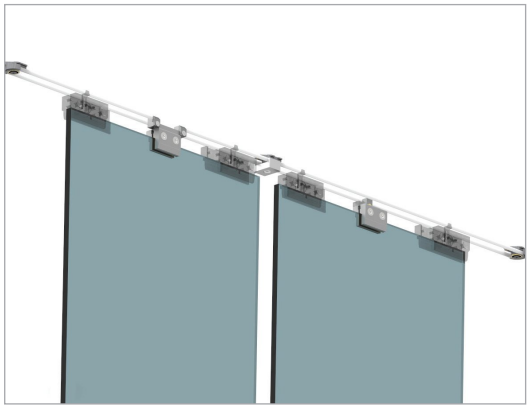

SYNCHRONIZED CLOSING

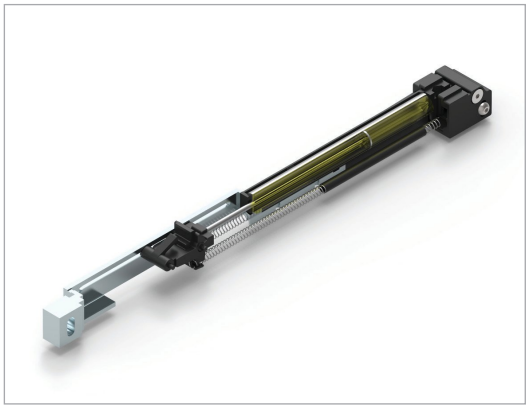

INTEGRATED STOP&SLIDE BRAKE TECHNOLOGY

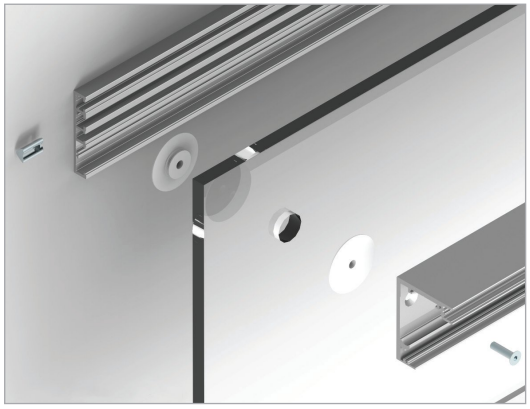

GLASS WALL INSTALLATION

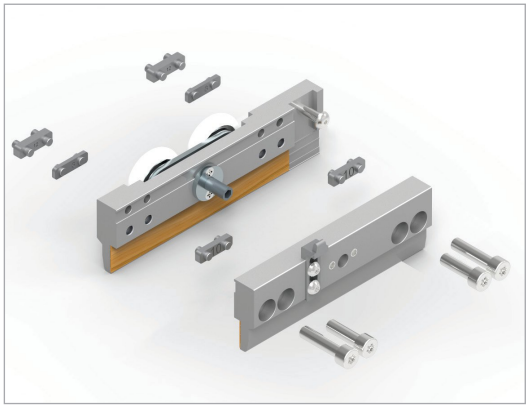

CLAMP

STRUCTURE Extruded primary-alloy aluminum, epoxy-polyester powder-coated, UV-resistant	**DOORS** Tempered glass 8 - 12 mm clear Laminated glass 44.2 - 55.2 - 66.2 clear	**DIMENSIONS** Single door W min 385 mm Tempered H max 3,000 mm	**DAMPER** Stop&Slide with integrated braking technology: stable, silent, and vibration-free movement	**OPENING** Side sliding, flush with ceiling	**DOOR ADJUSTMENT** + 3 / - 3 mm	**FASTENERS** Corrosion-resistant, stainless and galvanized	**LOAD SUPPORT** Top-hung: door weight carried by the upper profile
LOAD CAPACITY Up to 150 kg per door	**OPENING HARDWARE** Adhesive handle for glass	**THERMAL INSULATION** Tempered glass 10 mm, g 0.81	**GLASS ACOUSTIC INSULATION** Tempered glass 8 mm | 32 (-2;-3) dB 10 mm | 33 (-2;-3) dB 12 mm | 34 (0;2) dB Laminated glass 44.2 | 33 (-1;-3) dB 55.2 | 34 (-1;-3) dB 66.2 | 37 (-1;-3) dB	**ACCESSIBILITY** No restriction to passage	**IST. GIORDANO CERTIFICATIONS** UNI EN 1527:2013	**MATERIALS** 95% recyclable	

PROFILE COLORS



White

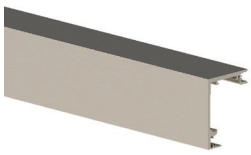

Anodized stainless steel

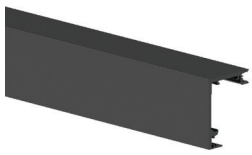

Anodized deep black

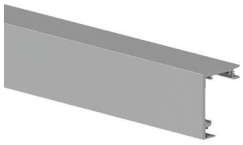

Anodized silver

TYPE OF GLASS



TEMPERED



LAMINATED



TEMPERED LAMINATED

GLASS FINISH



EXTRA-CLEAR



SMOKED



SATIN



PRATIK

telescopic sliding door system

innovative system with integrated Stop&Slide technology

Pratik is a high-performance modular system designed for maximum adjustability and to carry large doors. Its versatility makes it possible to create complete glass walls and to close two bi-parting doors simultaneously, optimizing time and movement. Behind the 83 mm fascia lies advanced technology: the Easy Clamp, tested by Istituto Giordano, guarantees reliability and safety.

Completing the system, the exclusive Stop&Slide, the only damper on the market with a metal oil piston and a single, one-piece body, eliminates vibration and ensures smooth, silent closing. These technical solutions make Pratik ideal for both light and heavy doors, offering a quiet, stable, and safe user experience.

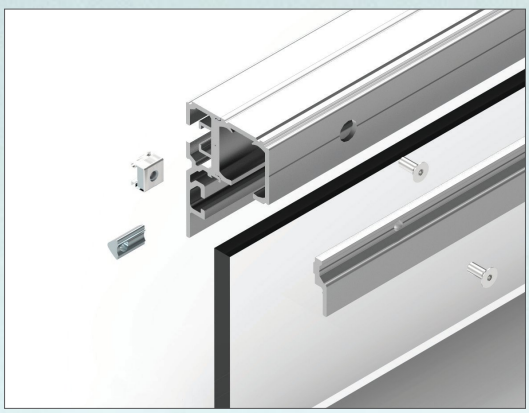

Fixed-glass mounting profile for fast, easy installation

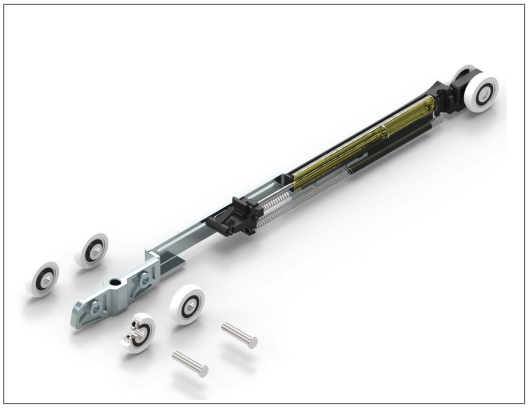

- Double rear bearing for optimal sliding
- 12 mm oil piston with double spring for smooth movement
- Single die-cast metal body

INTEGRATED STOP&SLIDE BRAKE TECHNOLOGY



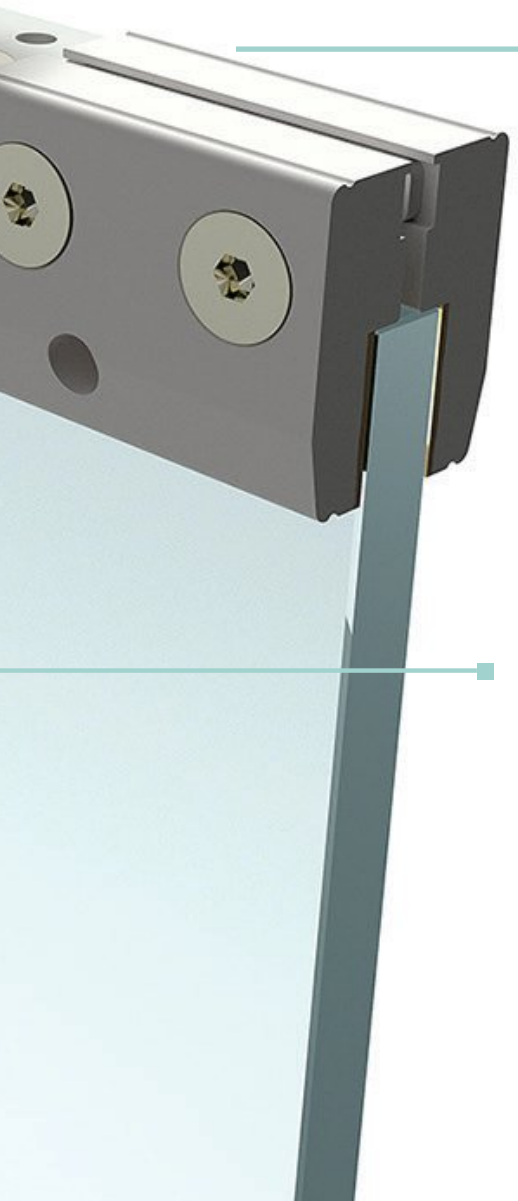

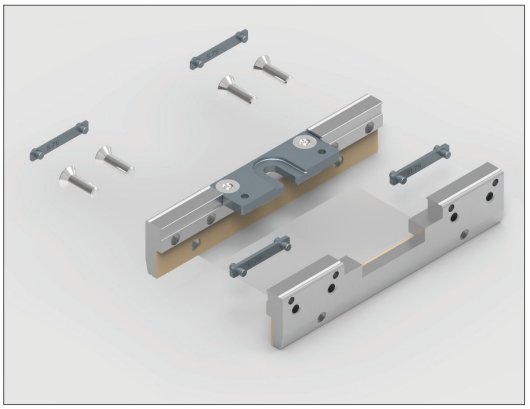

- Metal spacers for glass thickness from 8 to 12 mm
- Slotted coupling plate
- Pressure clamps, no glass fabrication required

EASY CLAMP

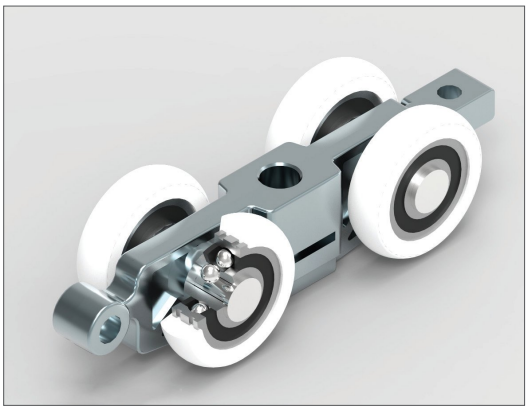

- 20 mm shielded steel bearing
- Slotted coupling plate
- Pressure clamps, no glass fabrication required
- Safety tooth to prevent screw release
- Ready for safety pins

CARRIAGE





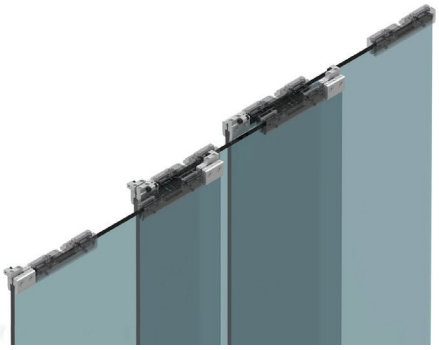

PRATIK | TELESCOPIC

simultaneous sliding doors

The synchro system simplifies the operation of glass partitions made up of multiple doors, so they move smoothly and quietly. When one door is pushed or pulled, the other moves in sync, driven by an internal connection that transmits the movement.

Stop&Slide
ABS safety system

INTEGRATED TECHNOLOGY

The Pratik system can be combined with technologies such as Stop&Slide, which cushions closing to reduce vibration and noise, for quiet, smooth, and safe closing even in complex configurations.

TECHNICAL DRAWINGS
see page 211

PRATIK

Min. door width	1 Stop&Slide brake: 500 - 560 - 600 mm (19.7 - 22.0 - 23.6 in) 2 Stop&Slide brakes: 625 - 780 - 825 mm (24.6 - 30.7 - 32.5 in)
Max opening height	3,000 mm (118.1")
Max door weight	120 kg (265 lb)
Glass thickness	8 - 10 - 12 mm (0.31" - 0.39" - 0.47") (44.2 - 55.2 - 66.2)
Damper	65 - 90 - 120 kg (143 - 198 - 265 lb)
Distance between doors	16 mm
Door adjustment	± 6 mm
Recommended applications	ideal for interior partition doors

PRATIK TELESCOPIC MECHANICAL / SIMULTANEOUS

TECHNICAL DRAWINGS
see pages 213 - 215

Max door width	Min. 500 mm (19.7") - Max 1,200 mm (47.2")
Max opening height	3,000 mm (118.1")
Max door weight	120 kg (265 lb)
Glass thickness	8 - 10 mm (0.31" - 0.39") (44.2 - 55.2)
Distance between doors	16 - 24 mm
Door adjustment	± 6 mm
Recommended applications	ideal for interior partition doors and telescopic door solutions

TECHNICAL SPECIFICATIONS

STRUCTURE Extruded primary-alloy aluminum, epoxy-polyester powder-coated, UV-resistant	**DOORS** Tempered glass 8 - 12 mm clear Laminated glass 44.2 - 55.2 - 66.2 clear	**DIMENSIONS** Single door W min 500 mm Tempered H max 3,000 mm	**DAMPER** Stop&Slide with integrated braking technology: stable, silent, and vibration-free movement	**OPENING** Side sliding, flush with ceiling	**DOOR ADJUSTMENT** ± 6 mm	**FASTENERS** Corrosion-resistant, stainless and galvanized
LOAD CAPACITY Up to 120 kg per door	**OPENING HARDWARE** Adhesive handle for glass	**THERMAL INSULATION** Tempered glass 10 mm, g 0.81	**GLASS ACOUSTIC INSULATION** Tempered glass 8 mm | 32 (-2;-3) dB 10 mm | 33 (-2;-3) dB 12 mm | 34 (0;2) dB Laminated glass 44.2 | 33 (-1;-3) dB 55.2 | 34 (-1;-3) dB 66.2 | 37 (-1;-3) dB	**ACCESSIBILITY** No restriction to passage	**LOAD SUPPORT** Top-hung: door weight carried by the upper profile	**MATERIALS** 95% recyclable

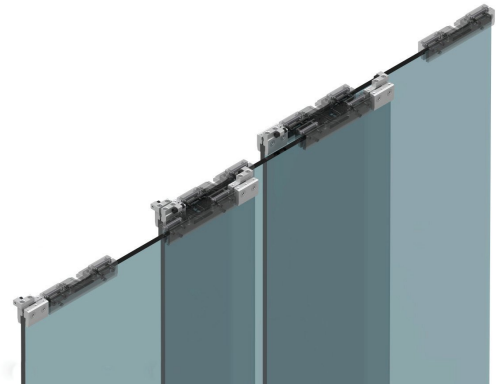

MECHANICAL TELESCOPIC KIT

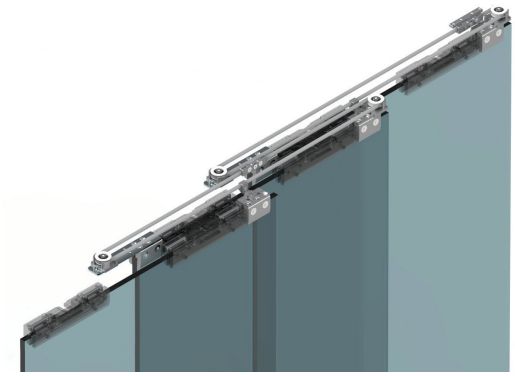

SIMULTANEOUS TELESCOPIC KIT

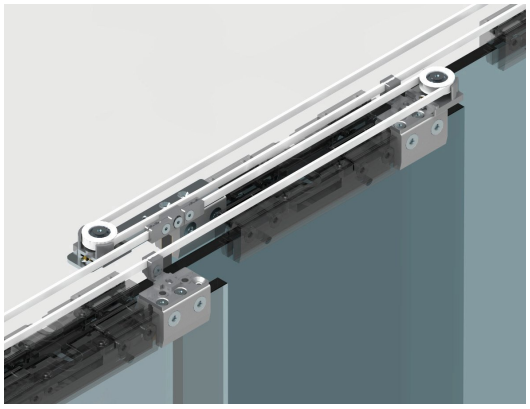

TOOTHED BELT

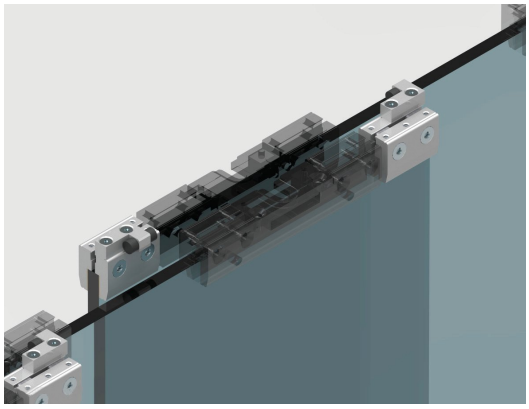

DRIVE CLAMPS

GLASS



TEMPERED

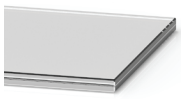

LAMINATED



TEMPERED LAMINATED

PROFILE COLORS



Anodized silver

FINISH



EXTRA-CLEAR



SMOKED



SATIN



CASPER

ceiling-flush sliding door system

sliding system fully integrated into the suspended ceiling

Casper is the technological heart of the range: a sliding system fully integrated into the suspended ceiling, letting the door glide with no visible track for a clean, almost “magical” effect. Its minimalist design is paired with Stop&Slide technology, which cushions the closing of the glass smoothly and silently through shielded bearings and a metal oil piston.



Stop&Slide
ABS safety system

Casper is an invisible sliding system with a minimalist design and strong visual impact: the door glides with a surprising effect, with no visible track, integrating seamlessly into the suspended ceiling. A technology that combines essential aesthetics with maximum functionality, ideal for anyone looking for refined solutions that are quick to manage.

ESSENTIAL DESIGN
Structure fully recessed into the drywall for a clean, contemporary result, with completely hidden mechanisms.

PRACTICAL INSTALLATION
Two-stage assembly:

- Track installed before the suspended ceiling is constructed;
- Doors installed once work is complete, ideal for protecting the glass.

MULTIPLE CONFIGURATIONS
Available in single- or multi-door versions to create wide openings and continuous architectural solutions.

SMOOTH AND SILENT SLIDING
Shielded bearings and the Stop&Slide damping system with integrated braking technology deliver stable, silent, and vibration-free movement.

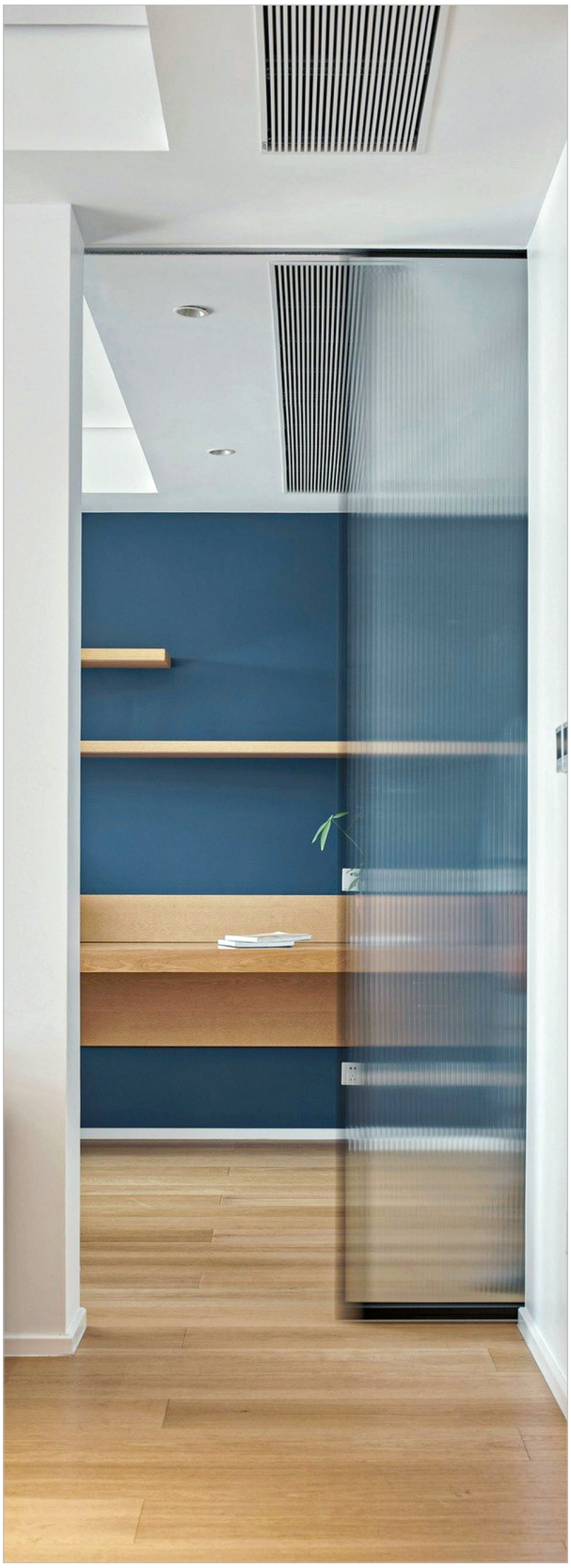

TECHNICAL DRAWINGS
see page 217

CASPER

Min. door width	1 Stop&Slide brake: 585 - 610 mm (23.0 - 24.0 in) 2 Stop&Slide brakes: 830 - 880 mm (32.7 - 34.6 in)
Max opening height	3,000 mm (118.1")
Max door weight	150 kg (331 lb)
Glass thickness	8 - 12 mm (0.31" - 0.47") (44.2 - 55.2 - 66.2)
Damper	70 - 90 kg (154 - 198 lb)
Distance between doors	21 mm
Door adjustment	± 5 mm
Recommended applications	ideal solutions for living areas and rooms with suspended ceilings

TECHNICAL SPECIFICATIONS

STRUCTURE Extruded primary-alloy aluminum, powder-coated with UV-resistant epoxy-polyester resin paint	**DOORS** Tempered glass 8 - 12 mm clear Laminated glass 44.2 - 55.2 - 66.2 clear	**DIMENSIONS** Single door W min 585 mm Tempered H max 3,000 mm	**DAMPER** Stop&Slide with integrated braking technology: stable, silent, and vibration-free movement	**OPENING** Side sliding, flush with ceiling	**DOOR ADJUSTMENT** ± 5 mm	**FASTENERS** Corrosion-resistant, stainless and galvanized
LOAD CAPACITY Up to 150 kg per door	**OPENING HARDWARE** Adhesive handle for glass	**THERMAL INSULATION** Tempered glass 10 mm, g 0.81	**GLASS ACOUSTIC INSULATION** Tempered glass 8 mm | 32 (-2;-3) dB 10 mm | 33 (-2;-3) dB 12 mm | 34 (0;2) dB Laminated glass 44.2 | 33 (-1;-3) dB 55.2 | 34 (-1;-3) dB 66.2 | 37 (-1;-3) dB	**ACCESSIBILITY** No restriction to passage	**LOAD SUPPORT** Top-hung: door weight carried by the upper profile	**MATERIALS** 95% recyclable

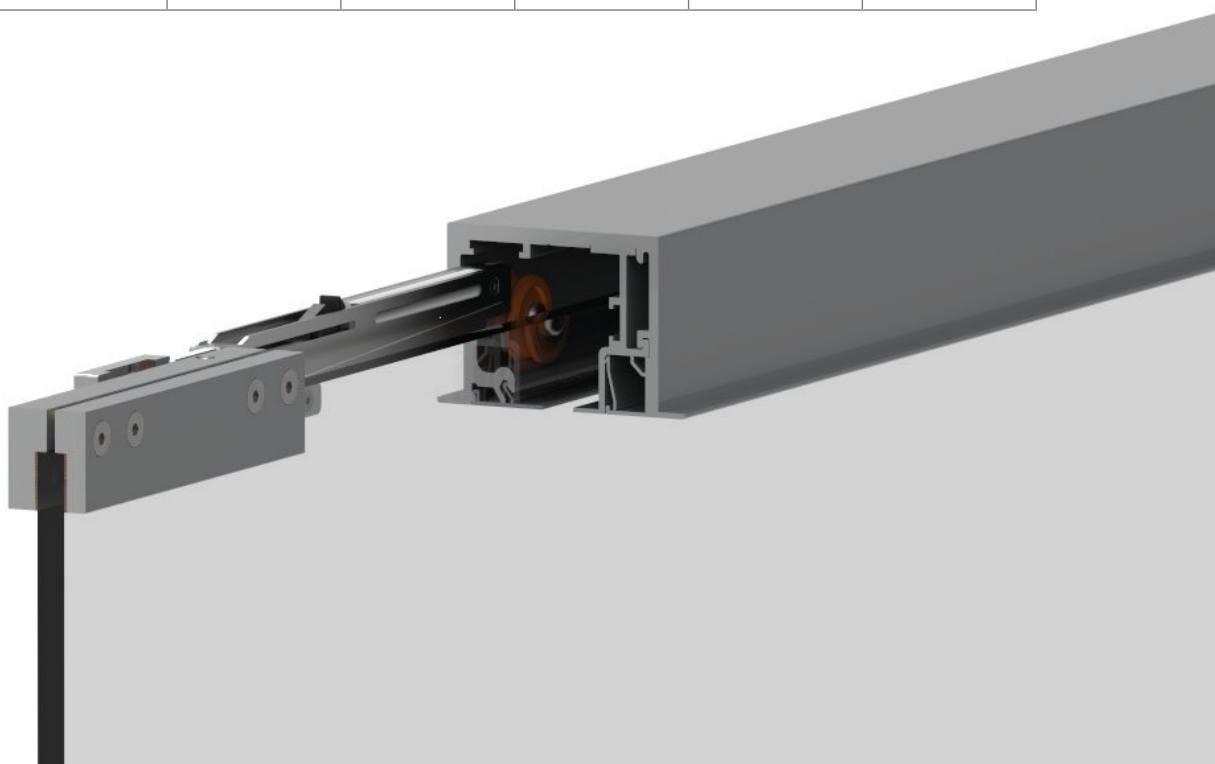

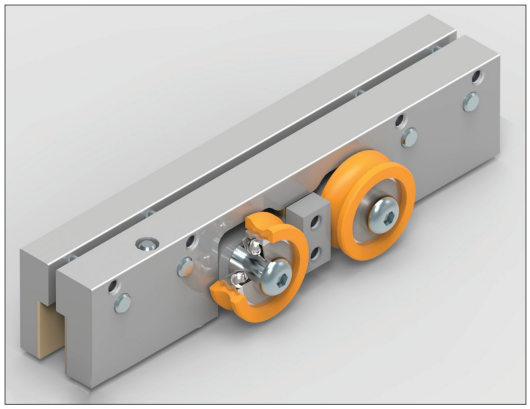

ALUMINUM CLAMPS

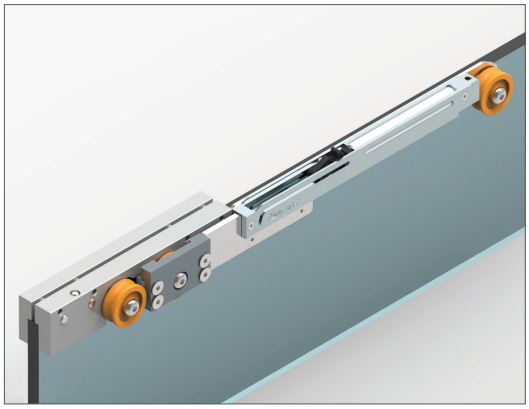

STOP&SLIDE BRAKE

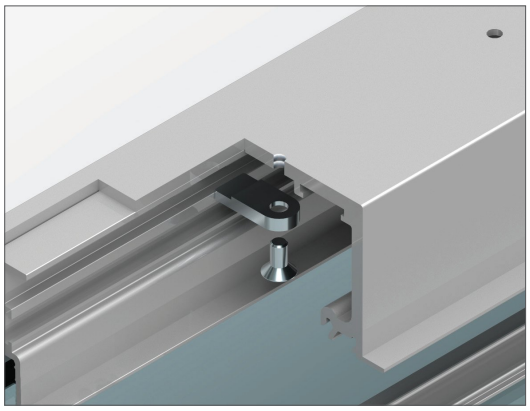

TOP TRACK

GLASS



TEMPERED

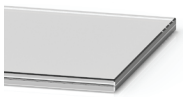

LAMINATED



TEMPERED LAMINATED

PROFILE COLORS

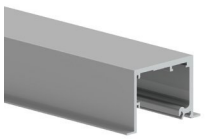

Anodized silver

FINISH



EXTRA-CLEAR



SMOKED



SATIN

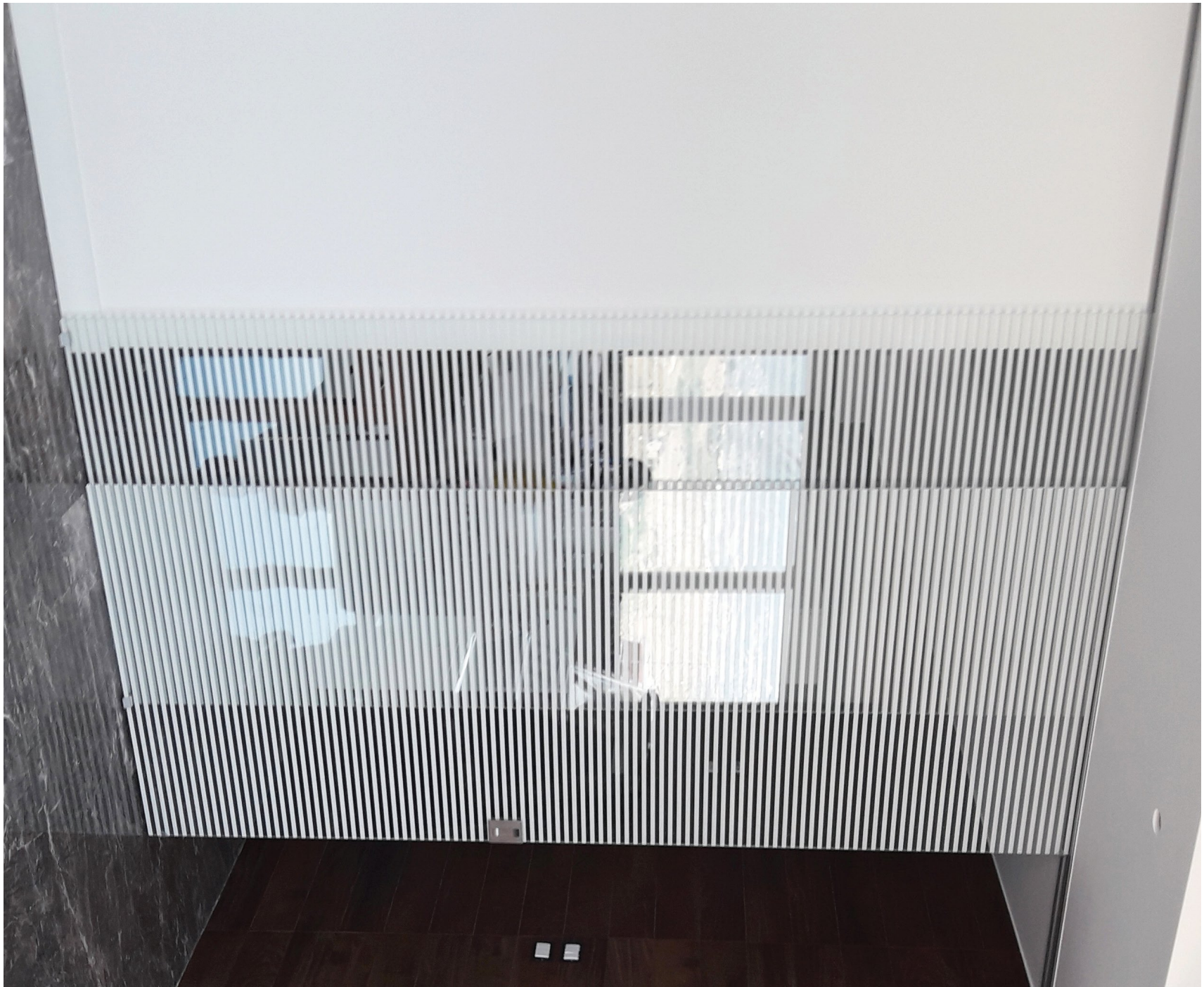



SKY

parallel ceiling-flush sliding door system

silent and minimalist concealed sliding system

Sky is a concealed sliding system designed for minimal aesthetics and exceptionally quiet movement, thanks to Stop&Slide damping technology. Designed for drywall installations, it leaves only 28 mm of the bottom cover visible, blending discreetly into any interior. The structure consists of a set of profiles that can be installed even before the drywall is hung, so the system can be completed with the glass doors only once the work is finished. A key advantage for protecting finishes and optimizing site management. Also available in multi-door configurations, Sky suits residential and commercial projects, delivering elegance, smooth operation, and long-term reliability.



Stop&Slide
ABS safety system

Sky combines clean design with maximum functionality. Stop&Slide technology delivers smooth, silent opening, while the bottom cover, with only 28 mm visible, ensures a discreet, elegant look:

- Ideal for drywall partitions;
- Profiles can be installed before finishing;
- Glass doors fitted once construction is complete;
- Also available in multi-door configurations.

The perfect choice for a reliable, modern sliding system with minimal visual impact.

MINIMAL DESIGN
Fully integrated into the suspended ceiling, the structure creates a clean, contemporary look in which every mechanical component disappears into the architecture.

VERSATILE APPLICATIONS
Perfect for living areas, design-led interiors, and projects requiring formal continuity and seamless integration between spaces.

SMOOTH AND SILENT SLIDING
Shielded bearings and the Stop&Slide damping system, with integrated braking technology, deliver stable, silent, vibration-free movement, ensuring long-lasting durability and superior ease of use.

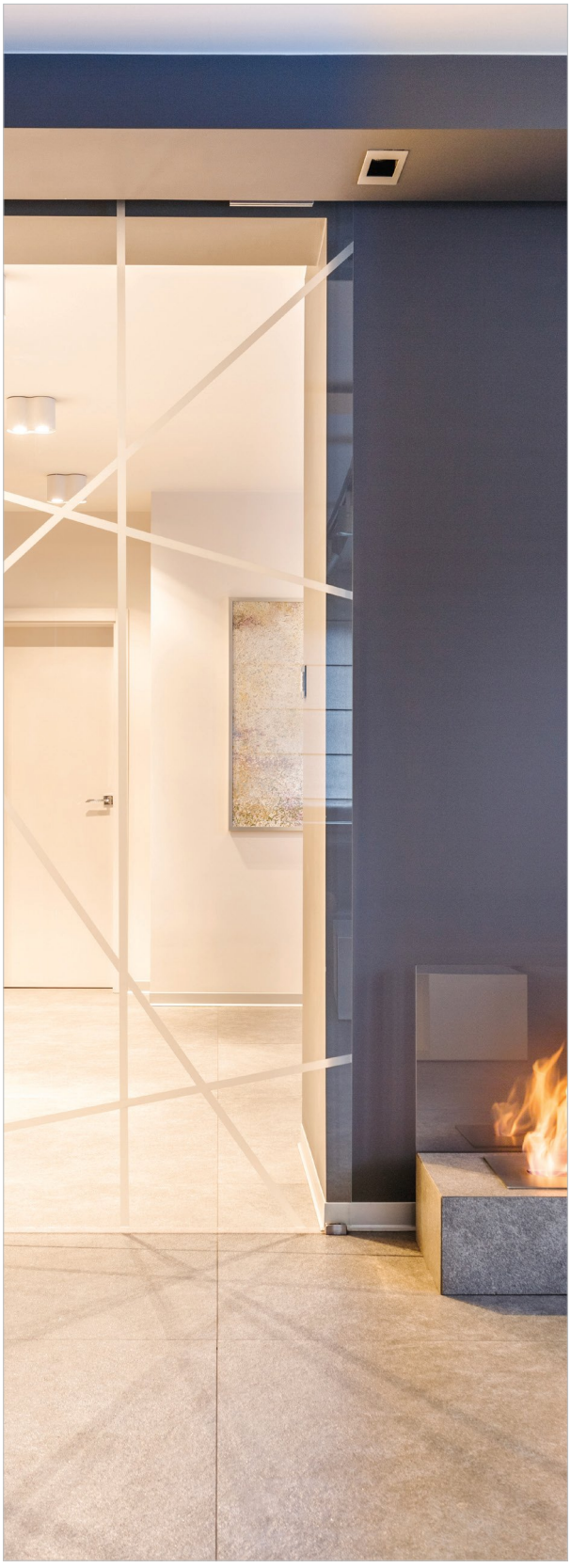

TECHNICAL DRAWINGS
see page 218

SKY

Min. door width	1 Stop&Slide brake: 500 - 560 - 600 mm (19.7 - 22.0 - 23.6 in) 2 Stop&Slide brakes: 625 - 780 - 825 mm (24.6 - 30.7 - 32.5 in)
Max opening height	3,000 mm (118.1")
Max door weight	120 kg (265 lb)
Glass thickness	10 mm (0.39")
Damper	65 - 90 - 120 kg (143 - 198 - 265 lb)
Distance between doors	10 mm
Door adjustment	± 5 mm
Recommended applications	ideal solutions for living areas and rooms with suspended ceilings that require telescopic doors

TECHNICAL SPECIFICATIONS

STRUCTURE Extruded primary-alloy aluminum, powder-coated with UV-resistant epoxy-polyester resin paint	**DOORS** Tempered safety glass 10 mm	**DIMENSIONS** Single door W min 500 mm Tempered H max 3,000 mm	**DAMPER** Stop&Slide with integrated braking technology: stable, silent, and vibration-free movement	**OPENING** Side sliding, flush with ceiling	**DOOR ADJUSTMENT** ± 5 mm	**FASTENERS** Corrosion-resistant, stainless and galvanized
LOAD CAPACITY Up to 120 kg per door	**OPENING HARDWARE** Adhesive handle for glass	**THERMAL INSULATION** Tempered glass 10 mm, g 0.81	**GLASS ACOUSTIC INSULATION** Tempered glass 10 mm | 33 (-2;-3) dB	**ACCESSIBILITY** No restriction to passage	**LOAD SUPPORT** Top-hung: door weight carried by the upper profile	**MATERIALS** 95% recyclable



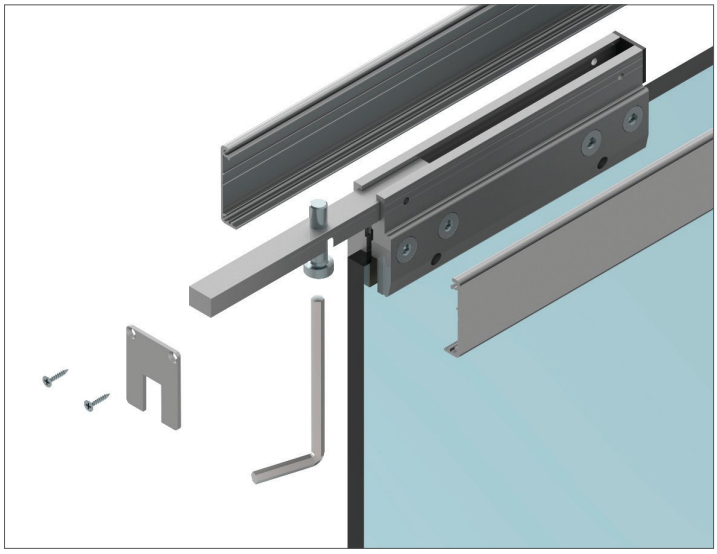

ALUMINUM CLAMP



STOP&SLIDE BRAKE

PROFILE COLORS

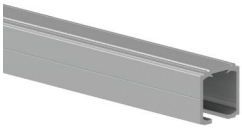

Anodized silver

GLASS



TEMPERED

FINISH



EXTRA-CLEAR



SMOKED



SATIN



Line
Bath

TECHNICAL GUIDANCE

MC SLIDE	SHOWER
Door width	1 Stop&Slide brake: 400 mm (15.7 in) 2 Stop&Slide brakes: 600 mm (23.6 in)
Structure	aluminum
Max door weight	65 kg (143 lb)
Glass thickness	8 - 10 mm (0.31" - 0.39") (44.2 - 55.2)
Damper	40 kg (88 lb)
Door adjustment	± 3 mm
Recommended applications	ideal for shower enclosures

bath line

GHIBLI QUADRO	LUX
350 mm (13.8")	350 mm (13.8")
stainless steel	stainless steel
60 kg (132 lb)	60 kg (132 lb)
6 - 8 mm (0.24" - 0.31")	6 - 8 mm (0.24" - 0.31")
No	No
± 3 mm	± 3 mm
ideal for shower enclosures	ideal for shower enclosures

Bath
146





BATH LINE

systems that transform your bathroom space

Mc Slide's Bath Line systems are available in full-height configurations for spa applications or in compact soft-close versions, offered in new technical finishes and in our proven stainless steel systems, renowned for their mechanical strength and durability. The modularity of the Bath systems allows direct integration with Mc Slide's sliding programs, enabling tailor-made configurations for residential settings. The aluminum profiles, available in silver, black, or polished finishes, feature square, reduced-section geometries designed to optimize structural stability and ensure smooth, quiet operation.

"Create a high-performance bathroom, designed for maximum functional efficiency and control of space"

Bath
148





SHOWER

sliding aluminum shower enclosure

Shower is a high-precision sliding system for shower enclosures, designed with minimalist architecture and advanced mechanics for fast, straightforward installation. Door movement is provided by high-efficiency carriages with latest-generation sliding bearings and patented all-metal dampers with oil-hydraulic pistons, ensuring a smooth, controlled opening/closing cycle with reduced vibration. The system is sized for applications ranging from small bathrooms to large configurations, with a maximum clear opening of 2 meters, while maintaining constant structural rigidity and dynamic stability. The reduced gap between the fixed glass and the sliding door (12 mm) is calibrated to optimize watertightness, minimizing water escape during use without compromising smooth sliding or the system's mechanical tolerance.

SHOWER

The Shower system offers:

▪ Minimal dimensions and compact design for installation in tight spaces, with no compromise on structural rigidity or sliding quality;

▪ Fully adjustable pressure-fit glass clamping system, allowing millimeter-precise centering of the panel and simplifying assembly and maintenance;

▪ Robust, modular structure, available in several installation configurations:

- **wall | wall**
- **wall | glass**
- **glass | glass**
- **corner**

▪ Silent, controlled sliding, ensured by high-precision shielded bearings and the premium Stop&Slide damping system, which delivers progressive braking, stability, and vibration-free opening/closing cycles.

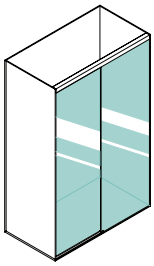

WALL | WALL

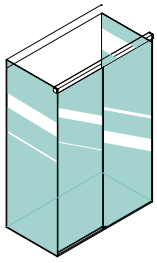

GLASS | GLASS

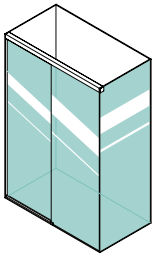

WALL | GLASS

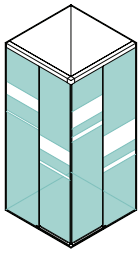

CORNER









TECHNICAL DRAWINGS
see page 220

SHOWER

Min. door width	1 Stop&Slide brake: 400 mm (15.7 in) 2 Stop&Slide brakes: 600 mm (23.6 in)
Max door weight	65 kg (143 lb)
Glass thickness	8 - 10 mm (0.31" - 0.39") (44.2 - 55.2)
Damper	40 kg (88 lb)
Door adjustment	± 3 mm
Recommended applications	ideal for shower enclosures

TECHNICAL SPECIFICATIONS

STRUCTURE Extruded primary-alloy aluminum, powder-coated with UV-resistant epoxy-polyester resin paint	**DOORS** Tempered glass 8 - 10 mm clear Laminated glass 44.2 - 55.2 clear	**DIMENSIONS** Single door W min 400 mm	**DAMPER** Stop&Slide with integrated braking technology: stable, silent, and vibration-free movement	**OPENING** Side sliding	**DOOR ADJUSTMENT** ± 3 mm
LOAD CAPACITY Up to 65 kg per door	**OPENING HARDWARE** Adhesive handle for glass	**LOAD SUPPORT** Top-hung: door weight carried by the upper profile	**MATERIALS** 95% recyclable	**FASTENERS** Corrosion-resistant, stainless and galvanized	

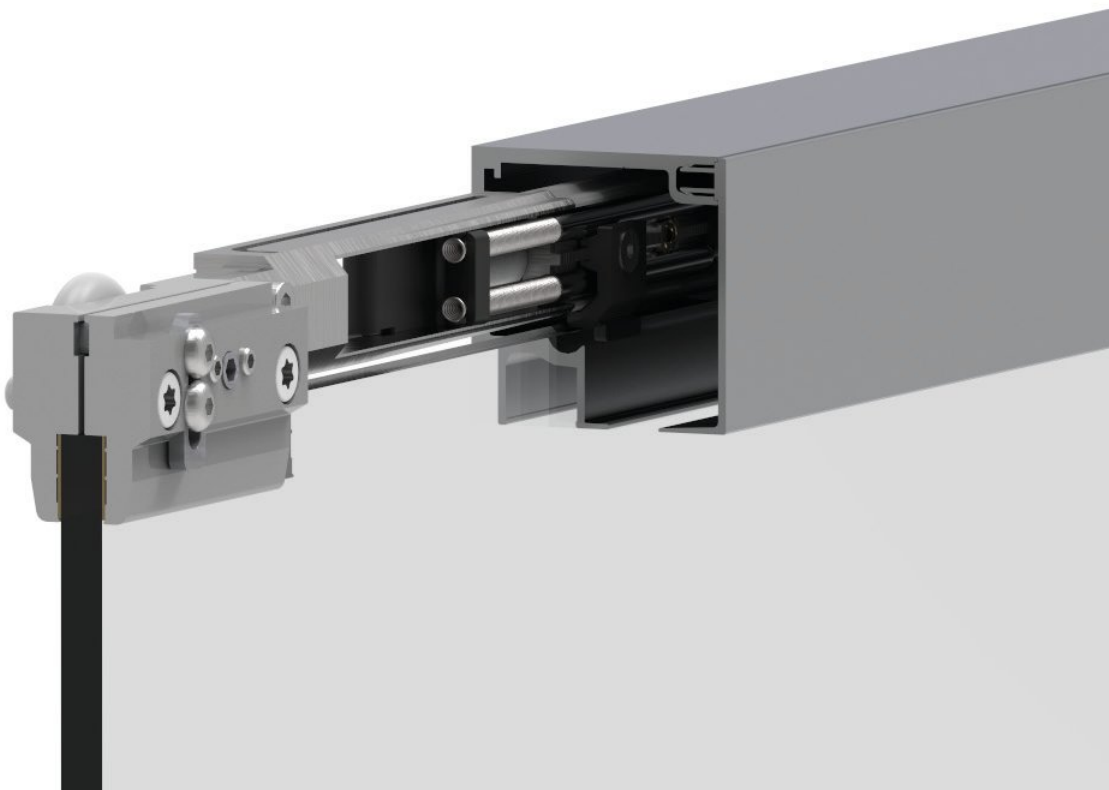

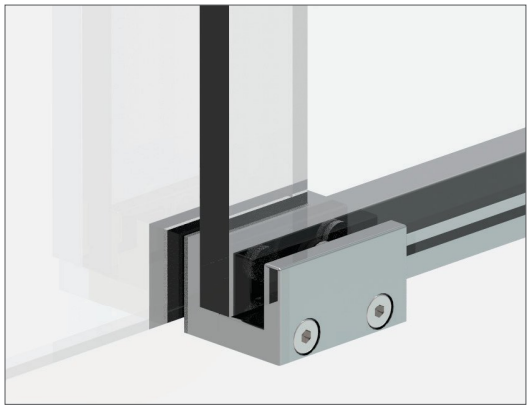

LOWER GUIDE

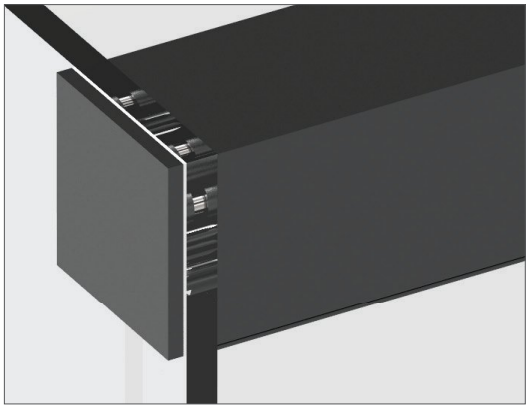

GLASS FITTING

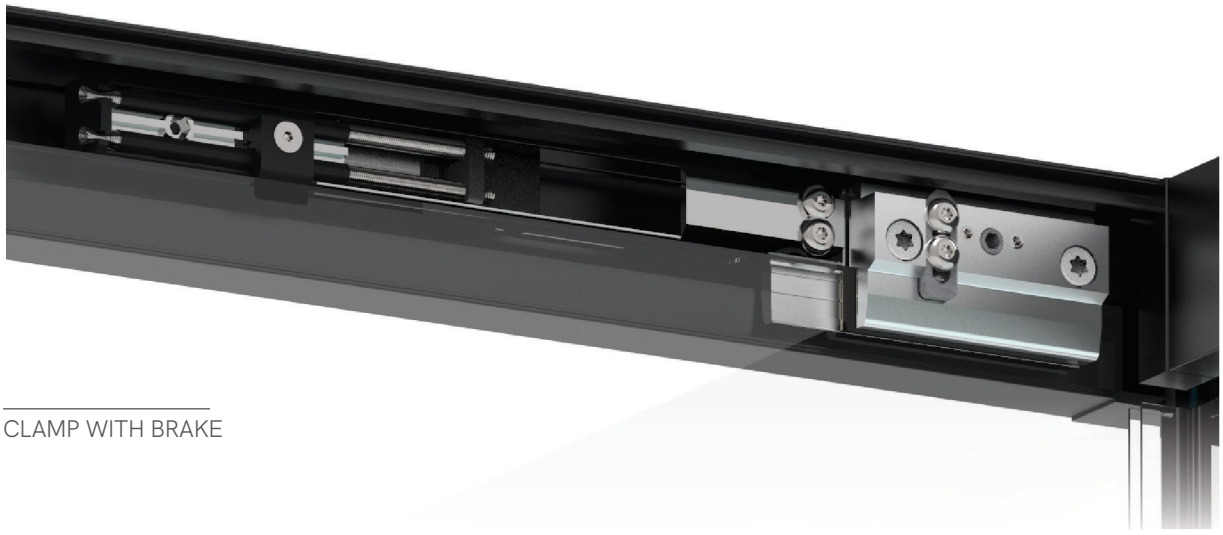

CLAMP WITH BRAKE

GLASS



TEMPERED

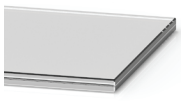

LAMINATED



TEMPERED LAMINATED

FINISH



EXTRA-CLEAR



SMOKED



SATIN

PROFILE COLORS



Anodized silver

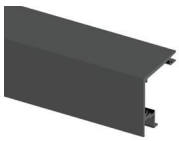

Anodized black

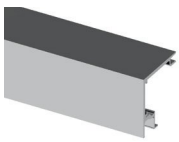

Polished





GHIBLI QUADRO

excellence in sliding shower systems

Ghibli Quadro represents excellence in sliding shower enclosure systems made of AISI 304 stainless steel, a material synonymous with durability, strength, and style. Its adjustable structure ensures simple installation and perfect adaptability to any configuration, while sliding on an elegant 30×10 mm rectangular tube gives the design a modern, clean line with smooth, stable movement. Ghibli Quadro is the ideal choice for a reliable, refined product that enhances any bathroom with a touch of contemporary elegance.

GHIBLI QUADRO



GHIBLI QUADRO



TECHNICAL DRAWINGS
see page 220

GHIBLI QUADRO

Min. door width	350 mm (13.8")
Max door weight	60 kg (132 lb)
Glass thickness	6 - 8 mm (0.24" - 0.31")
Door adjustment	± 3 mm
Recommended applications	ideal for shower enclosures

TECHNICAL SPECIFICATIONS

STRUCTURE Extruded primary-alloy aluminum, powder-coated with UV-resistant epoxy-polyester resin paint	**DOORS** Tempered safety glass 6 - 8 mm clear	**DIMENSIONS** Single door W min 350 mm	**OPENING** Side sliding	**DOOR ADJUSTMENT** ± 3 mm
OPENING HARDWARE Adhesive handle for glass	**LOAD SUPPORT** Top-hung: door weight carried by the upper profile	**MATERIALS** 95% recyclable	**FASTENERS** Corrosion-resistant, stainless and galvanized	**LOAD CAPACITY** Up to 60 kg per door

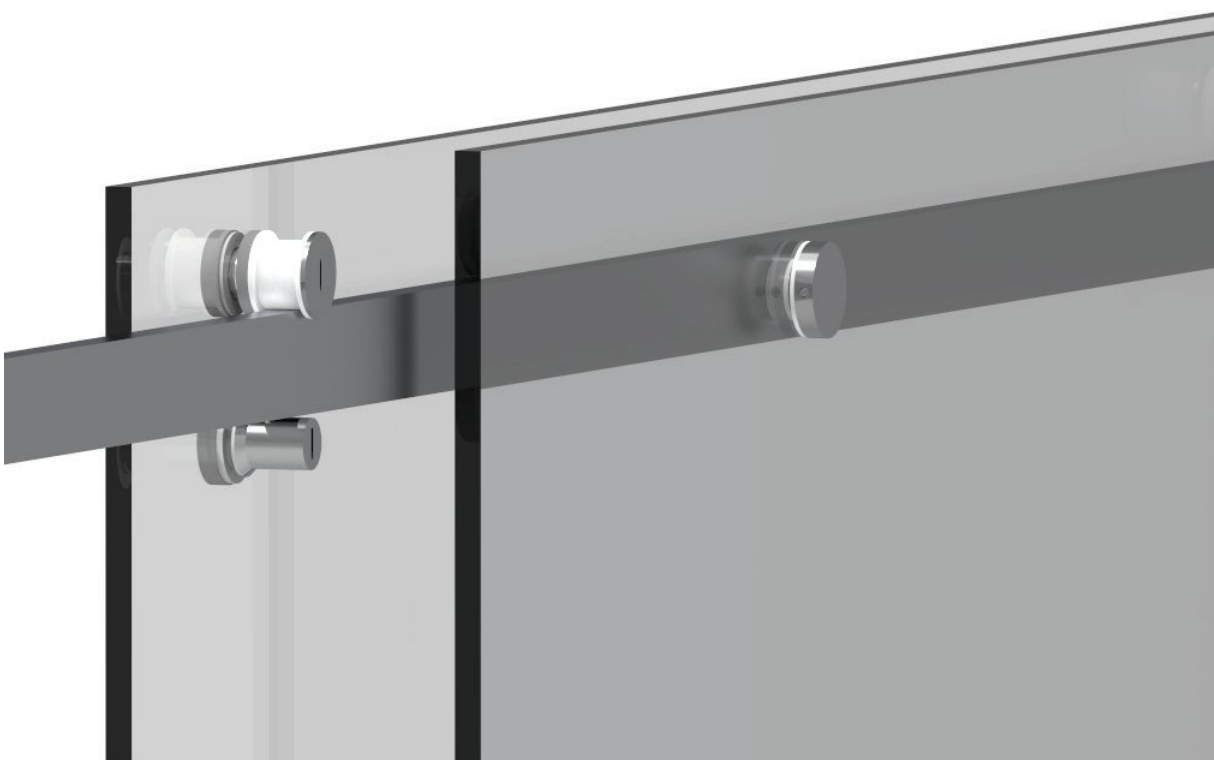

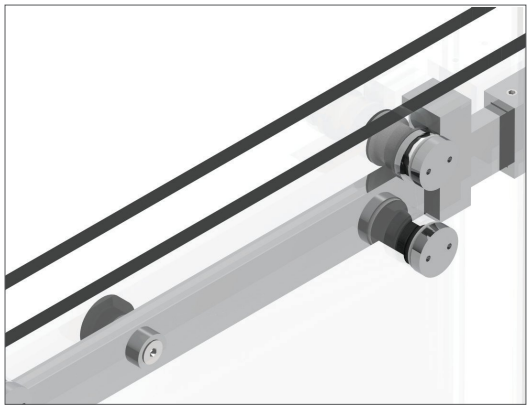

DOOR STOP

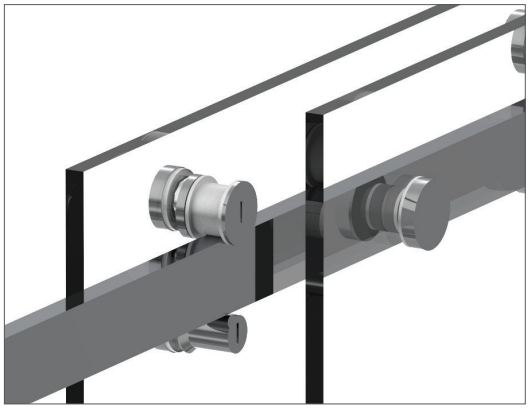

CARRIAGE



LOWER GUIDE

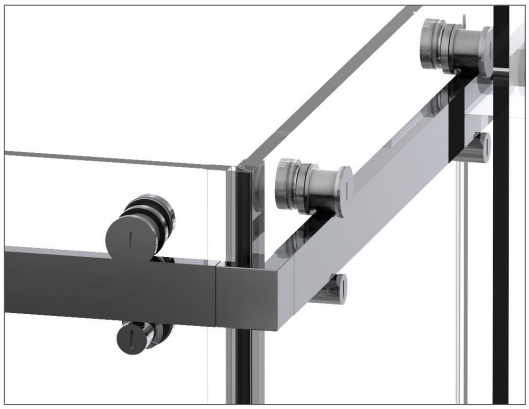

CORNER JOINT

PROFILE COLORS



Chrome

GLASS



TEMPERED

FINISH



EXTRA-CLEAR



SMOKED



SATIN

Bath
160





LUX

stainless steel sliding shower enclosure

Lux is a sliding system for shower enclosures made of AISI 304 stainless steel, a material that guarantees high corrosion resistance and long service life in humid environments. The system is fully adjustable to simplify installation and ensure precise panel alignment. Movement runs on a 30×10 mm rectangular tube, providing structural rigidity and smooth sliding thanks to the optimal fit between carriages and guide. Its clean, minimalist lines enhance a modern, bright aesthetic, integrating easily with different architectural configurations and tempered glass solutions.









TECHNICAL DRAWINGS
see page 220

LUX

Min. door width	350 mm (13.8")
Max door weight	60 kg (132 lb)
Glass thickness	6 - 8 mm (0.24" - 0.31")
Door adjustment	± 3 mm
Recommended applications	ideal for shower enclosures

TECHNICAL SPECIFICATIONS

STRUCTURE Extruded primary-alloy aluminum, powder-coated with UV-resistant epoxy-polyester resin paint	**DOORS** Tempered safety glass 6 - 8 mm clear	**DIMENSIONS** Single door W min 350 mm	**OPENING** Side sliding	**DOOR ADJUSTMENT** ± 3 mm
OPENING HARDWARE Adhesive handle for glass	**LOAD SUPPORT** Top-hung: door weight carried by the upper profile	**MATERIALS** 95% recyclable	**FASTENERS** Corrosion-resistant, stainless and galvanized	**LOAD CAPACITY** Up to 60 kg per door



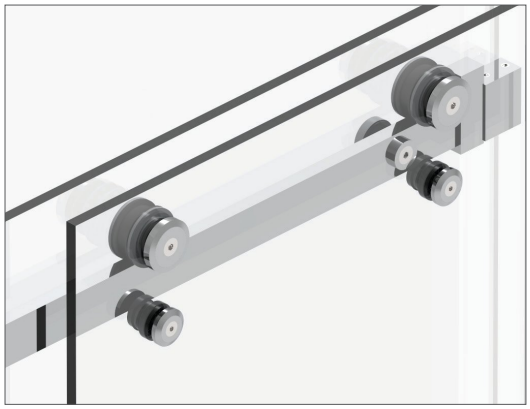

DOOR STOP

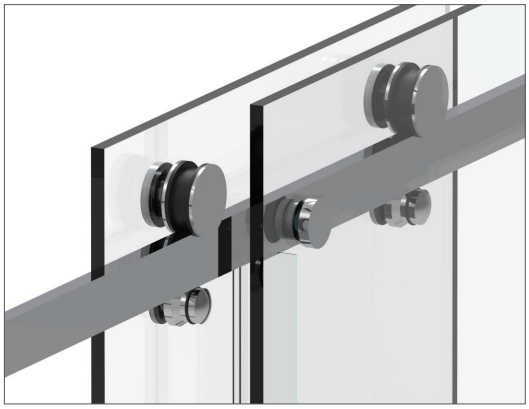

CARRIAGE



LOWER GUIDE



CORNER JOINT

PROFILE COLORS



Chrome

GLASS



TEMPERED

FINISH



EXTRA-CLEAR



SMOKED



SATIN



Accessories

TECHNICAL DRAWINGS
see page 221



POCKET GLASS

accessories for glass pocket doors

Today more than ever, making the most of space is a priority, and pocket frames for sliding doors offer a practical, elegant solution, especially when paired with glass doors. We offer two main versions, designed to meet every design requirement.

- **Standard pocket frame with jamb**
  The perfect choice for reliability and versatility. This version uses our classic Easy clamps, designed for strength, ease of installation, and a refined appearance.

- **Flush-to-wall pocket frame without jambs**
  The ideal option for an elegant, minimalist, and visually striking interior. Here we use Easy clamps with cover plates for a completely clean, modern look.

PROFILE COLORS

profile colors



Anodized stainless steel

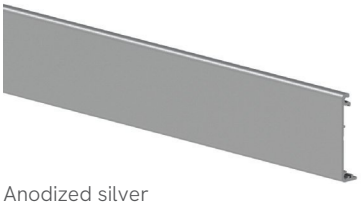

Anodized silver



FIXY

profiles for fixed glazing

Minimal-section aluminum profile designed for fixed glazing with 8 to 12.6 mm glass, compatible with monolithic and laminated glass, with gasket channels and direct fastening to masonry or metal structures. Ideal for gables, transoms, and fixed panels, it ensures straight lines, a clean aesthetic, and fast installation.

PROFILE COLORS

profile colors



Pure white - gloss/matte



Pearl white - gloss/matte



Anodized silver



Matte anthracite

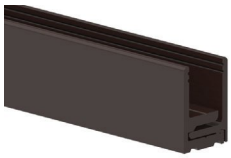

Matte chocolate brown



Intense matte black



Anodized stainless steel

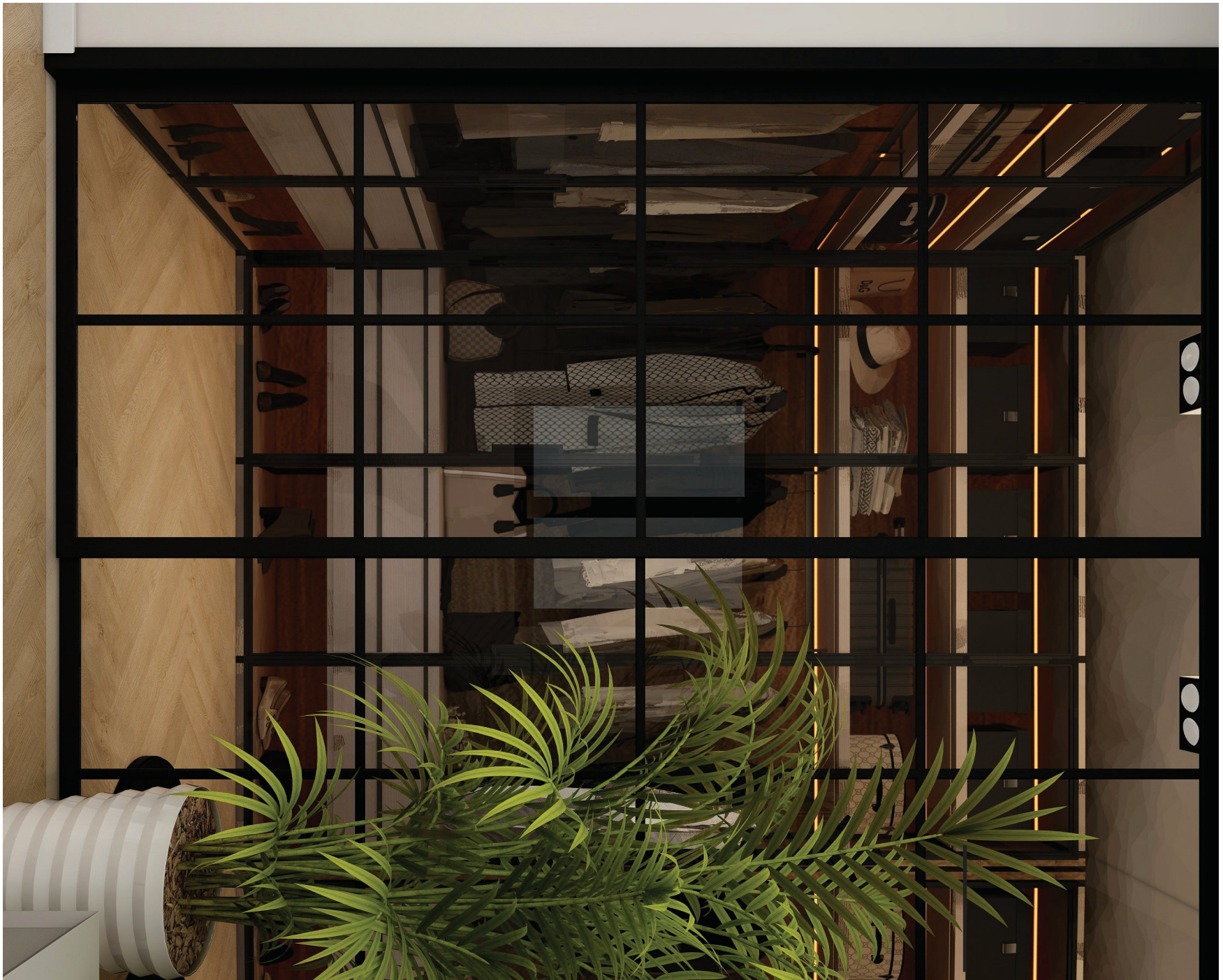

TECHNICAL DRAWINGS
see page 223



GALAXY

framed pocket sliding doors

accessories for Fusion framed door

A framed aluminum pocket sliding door designed for flush-wall pocket frames, featuring a minimalist aesthetic and broad installation compatibility. It can be installed in the same room as the Fusion door, ensuring visual consistency across different systems. Unlike all-glass doors, the aluminum perimeter frame requires no compensation profiles inside the pocket frame, simplifying installation and improving panel stability. Compatible with various glass types and available in finishes coordinated with the rest of the range.

PROFILE COLORS

profile colors



White

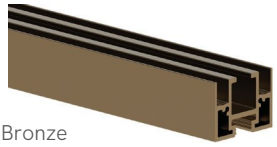

Bronze

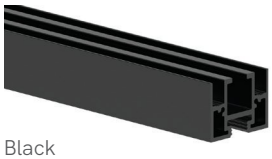

Black



Dark brown

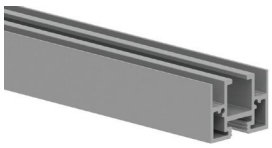

Anodized silver

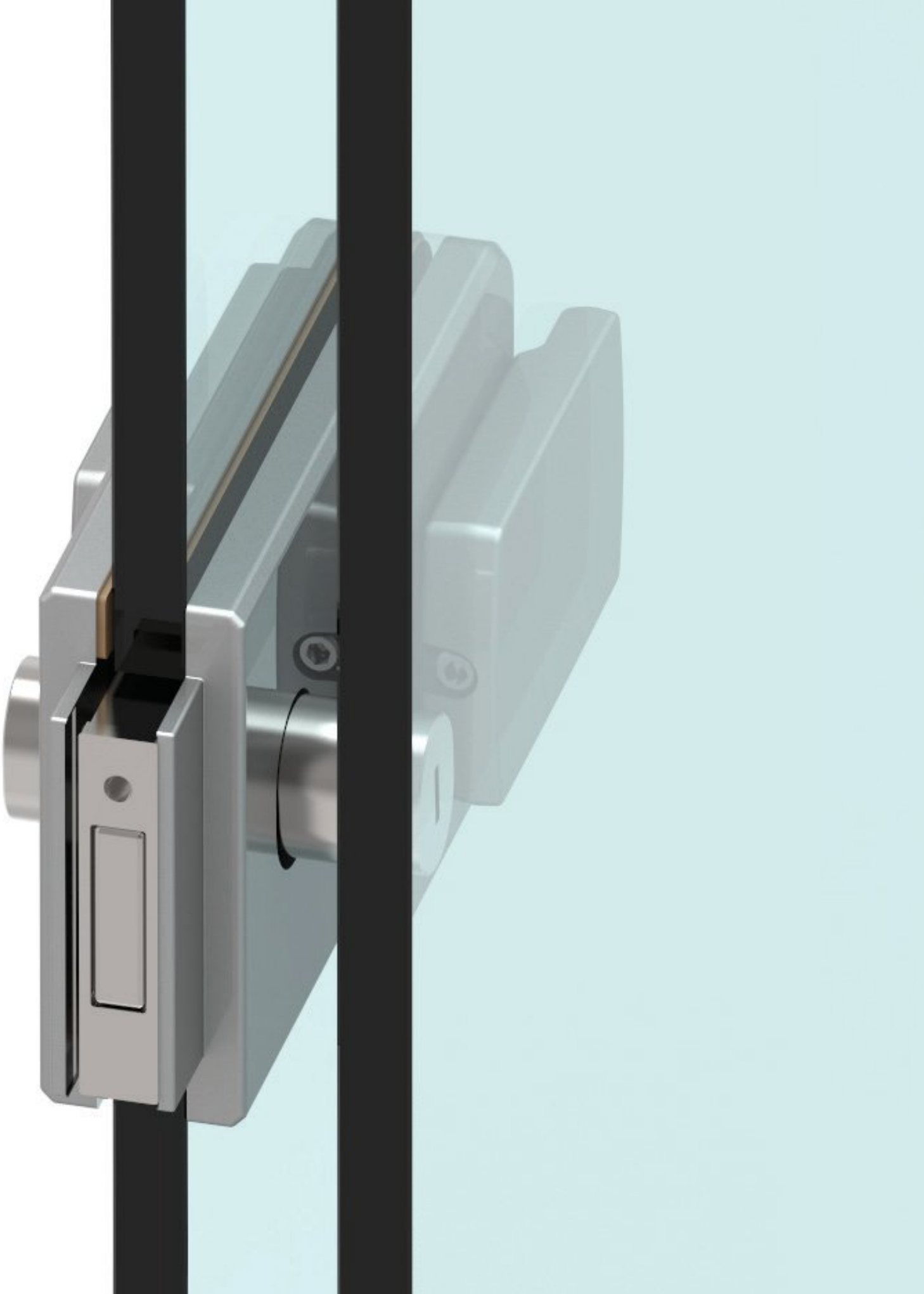

Locks and Handles





MG-Lock

magnetic lock for stacking panoramic glass doors

designed for Starglass and Libra systems

magnetic lock for stacking panoramic glass doors

MG-Lock is the ideal lock for stacking systems (Starglass and Libra), developed to meet growing demand for dedicated panoramic glazing accessories. Featuring an ergonomic flat-profile knob with rounded edges, it combines practical use with modern design. The strike plate echoes the clean lines of the lock body, ensuring aesthetic and functional consistency.

MG-Lock



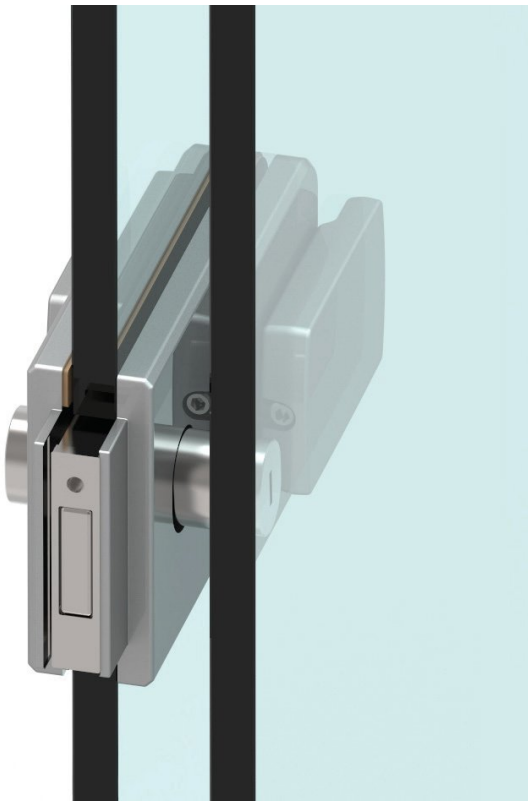

DESIGNED FOR VEPA

MG-Lock is a magnetic lock conceived, designed, and manufactured entirely in Italy by Mc Slide engineers and designers. It was created to meet a real market need: a lock with a handle designed specifically for stacking panoramic glazing, combining the specific functional and technical requirements of these installations with the modern design of glass and aluminum architecture.

magnetic operation

The lock is actuated by magnets, and the magnetic operating principle makes locking simpler. It is also quieter than mechanical versions, as the magnet is plastic-coated. With no latch protruding from the lock when the door is open, magnetic locks also look cleaner.

SECURITY AND CONFIGURATIONS

MG-Lock is available in two configurations:

1. double cylinder with flat security key and drill-resistant hardened steel pins, operated by a double Mc Slide knob;

2. thumb-turn, ideal for terraces and balconies, the lock is always reversible (ambidextrous).

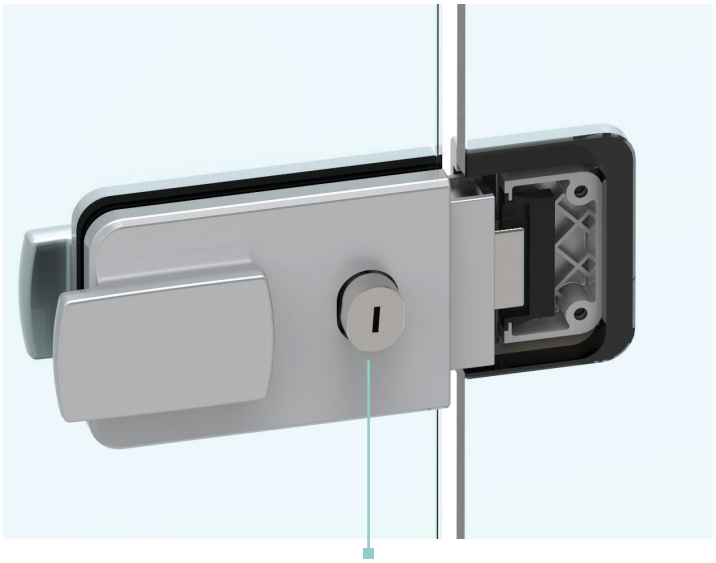

CONFIGURATION WITH DOUBLE CYLINDER AND KEY

THUMB-TURN CONFIGURATION

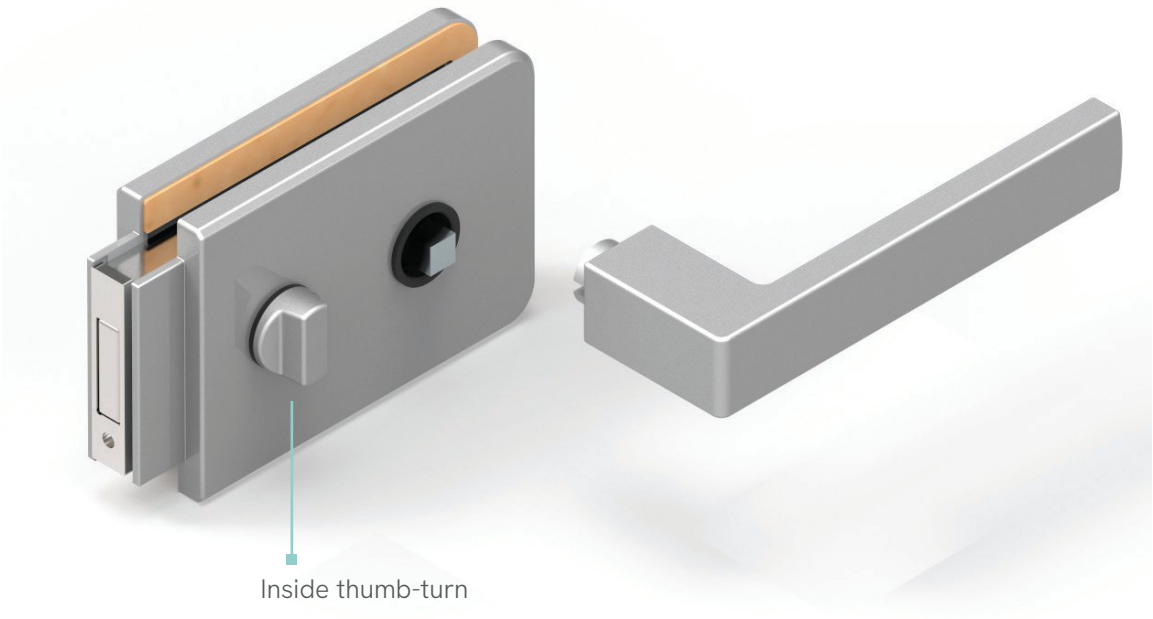

TECHNICAL DRAWINGS
see page 224

MG-Lock

Structure	Die-cast zinc alloy (Zamak) with liquid paint finish
Glass thickness	10 mm (0.39") (55.2)
Reversibility	Reversing the internal drive
Glass fabrication	Notch required
Handles	Mc Slide knob or standard handle with 8x8 spindle
Configurations	Key lock, or inside thumb-turn only
Fasteners	Corrosion-resistant, stainless and galvanized
Materials	95% recyclable

INTERCHANGEABLE HANDLES

Its 8 mm square spindle also allows any standard handle or knob to be fitted instead of the Mc Slide knob, meeting every functional or aesthetic requirement.

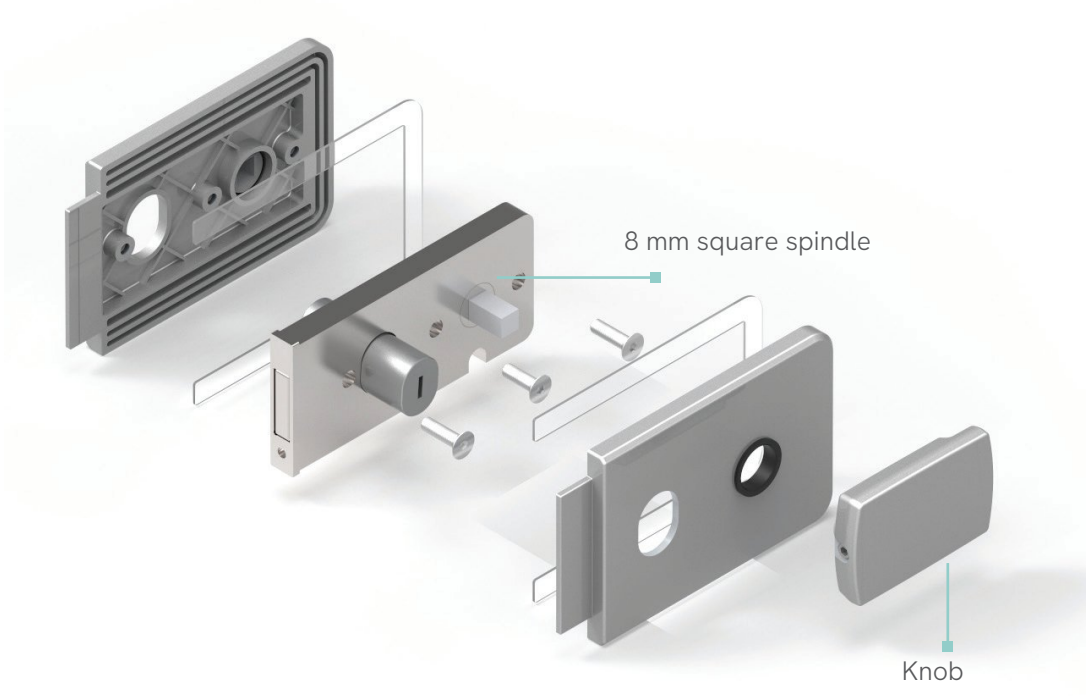

STRUCTURE Die-cast zinc alloy (Zamak) with liquid paint finish	**GLASS THICKNESS** Tempered safety glass 10 mm clear Laminated glass 55.2 class 1B1 UNI EN 12600	**REVERSIBILITY** Reversing the internal drive of the lock	**GLASS FABRICATION** Notch required	**HANDLES** Mc Slide knob or standard handle with 8x8 spindle	**CONFIGURATIONS** Inside/outside key, or inside thumb-turn only	**FASTENERS** Anti-corrosion, stainless steel and galvanized	**MATERIALS** 95% recyclable

COLORS



SILVER



WHITE

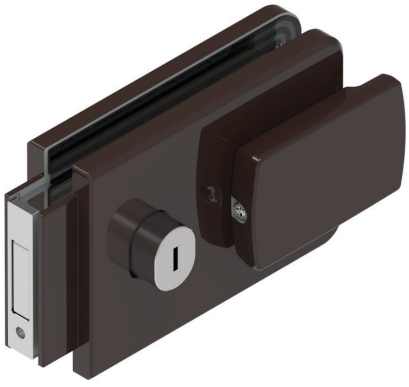

BROWN



BLACK

TECHNICAL DRAWINGS
see page 226



EXTERIOR VIEW

BLOCK

bi-parting door lock

AVAILABLE FINISHES

- Satin Silver



INTERIOR VIEW



STRIKE PLATE

HANDLES | adhesive handles



FLY

FINISH

Silver White Matte Black Chrome

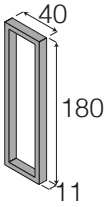



QUADRA

FINISH

Silver White Matte Black

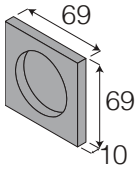



LINEA

FINISH

Silver White Matte Black Chrome

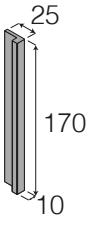



ROUND

FINISH

Silver White Matte Black Chrome

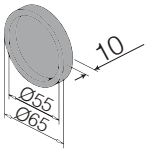



Training

SLIDING GLASS SPECIALISTS

HD-Emia

top-tier training for industry professionals

Mc Slide Professional Training



Our Mc Slide technical training course is designed for installers, glaziers, and industry professionals who need advanced training on Mc Slide systems. The courses give participants specific skills in site measurement, installation, and configuration of panoramic glazing, with a particular focus on correct procedures and performance standards.

TRAINING PROGRAM

THEORETICAL MODULES

In-depth study of the technical features of profiles, structural components, and accessories. Analysis of Mc Slide system performance, including wind resistance, watertightness, and material durability.

PRACTICAL SESSIONS

Execution of the main operational phases: site measurement, preparation of openings, anchoring techniques, panel alignment, final adjustments, and functional checks. Exercises involve direct use of our systems to ensure practical, applied learning.

CERTIFICATION OF COMPETENCE

At the end of the course, a certificate of participation will be issued by Istituto Giordano, an accredited technical certification body, confirming the professional training completed.

DIRECT INTERACTION WITH MC SLIDE SYSTEMS

Participants work on real samples of our panoramic glazing, becoming familiar with the technical specifications, assembly logic, and functional advantages of the products.



Technical Section

SLIDING FLOOR | 2-RAIL

all-glass sliding system with ABS technology

2-rail

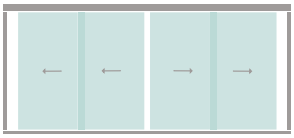

Bi-parting opening
L Max 5,200 mm (204.7")

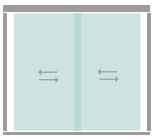

Single opening
L Max 2,600 mm (102.4")

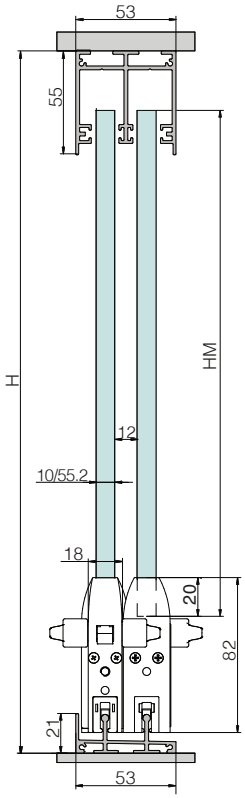

Surface-mounted

HM = H - 104

PROFILE RANGE - 2-RAIL

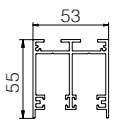

Upper profile

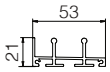

Surface-mounted

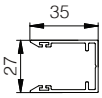

Side profile

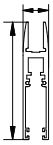

Clamp profile

SLIDING FLOOR | 3-RAIL

all-glass sliding system with ABS technology

3-rail

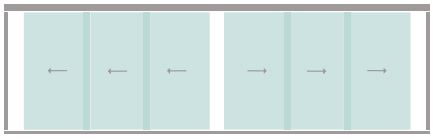

Bi-parting opening
L Max 7,800 mm (307.1")

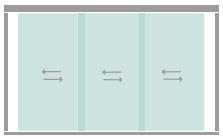

Single opening
L Max 3,900 mm (153.5")

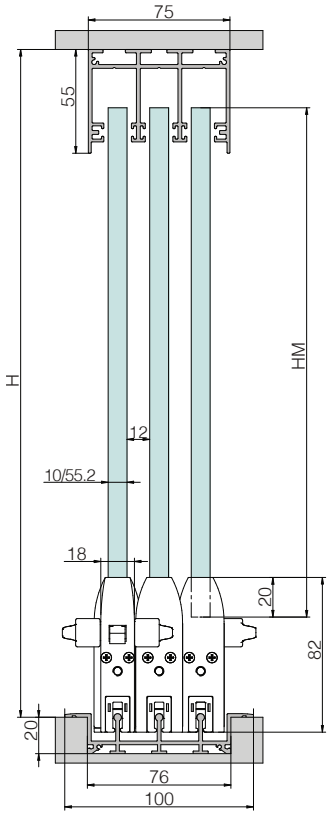

HM = H - 84

Recessed

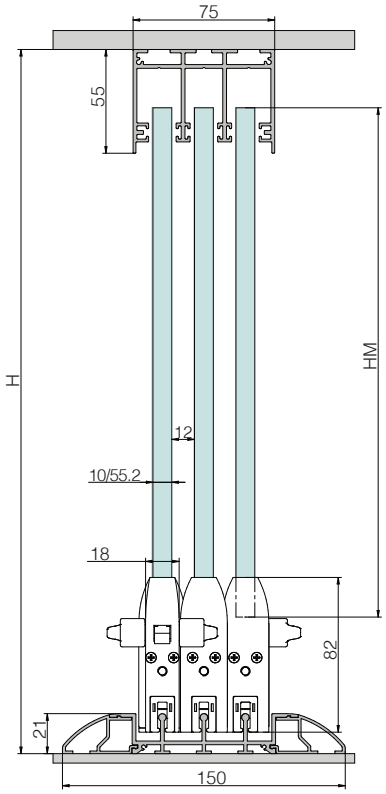

HM = H - 104

Goose beak

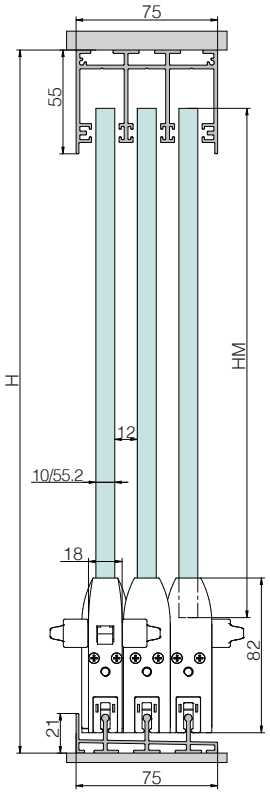

HM = H - 104

Surface-mounted

PROFILE RANGE - 3-RAIL

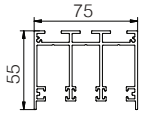

Upper profile

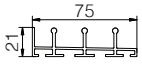

Surface-mounted

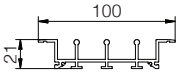

Recessed

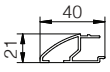

Goose beak

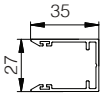

Side profile

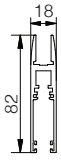

Clamp profile

SLIDING FLOOR | 4-RAIL

all-glass sliding system with ABS technology

4-rail

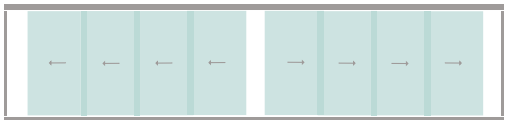

Bi-parting opening
L Max 10,400 mm (409.4")

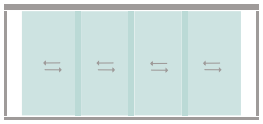

Single opening
L Max 5,200 mm (204.7")

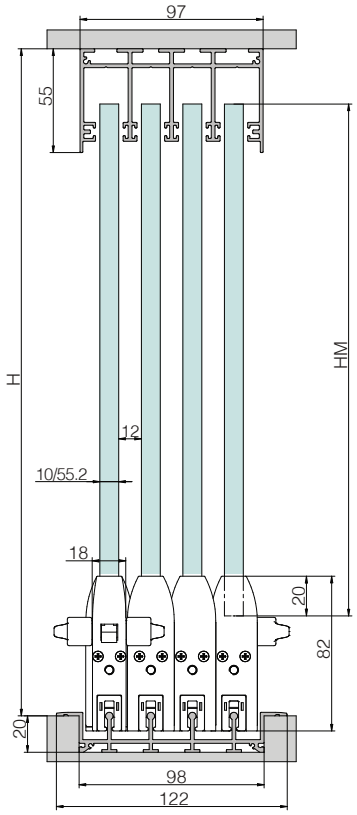

HM = H - 84

Recessed

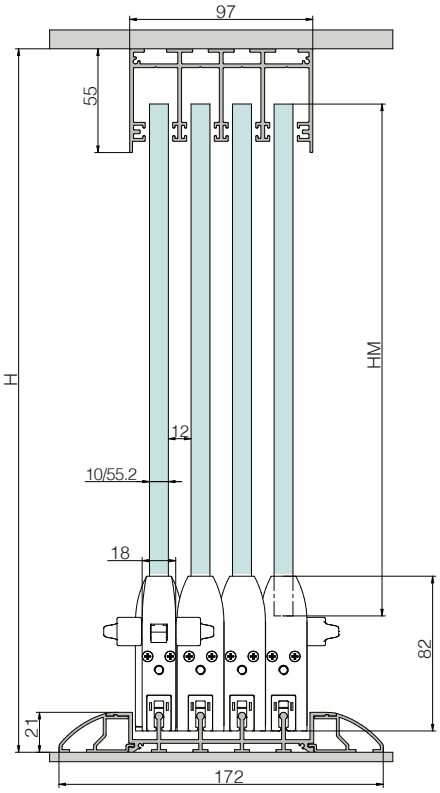

HM = H - 104

Goose beak

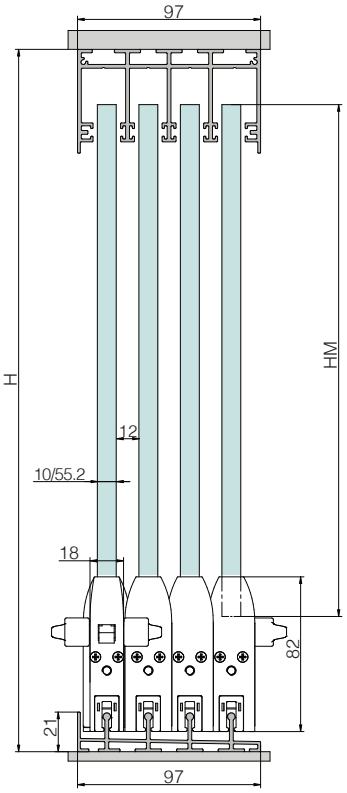

HM = H - 104

Surface-mounted

PROFILE RANGE - 4-RAIL

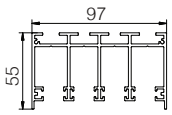

Upper profile

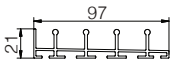

Surface-mounted

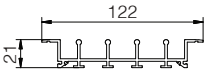

Recessed

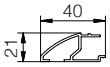

Goose beak

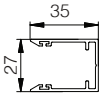

Side profile

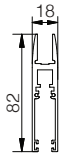

Clamp profile

SLIDING FLOOR | 5-RAIL

all-glass sliding system with ABS technology

5-rail

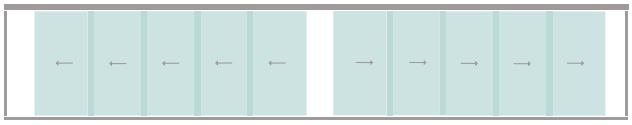

Bi-parting opening
L Max 13,000 mm (511.8")

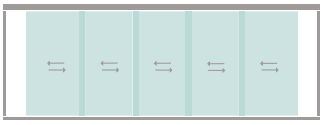

Single opening
L Max 6,500 mm (255.9")

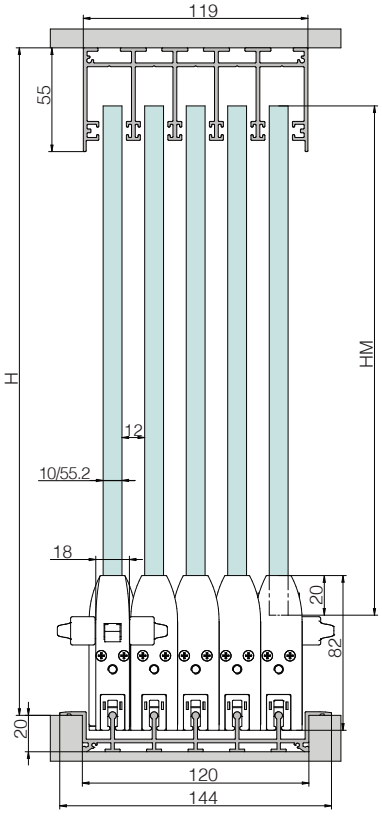

HM = H - 84

Recessed

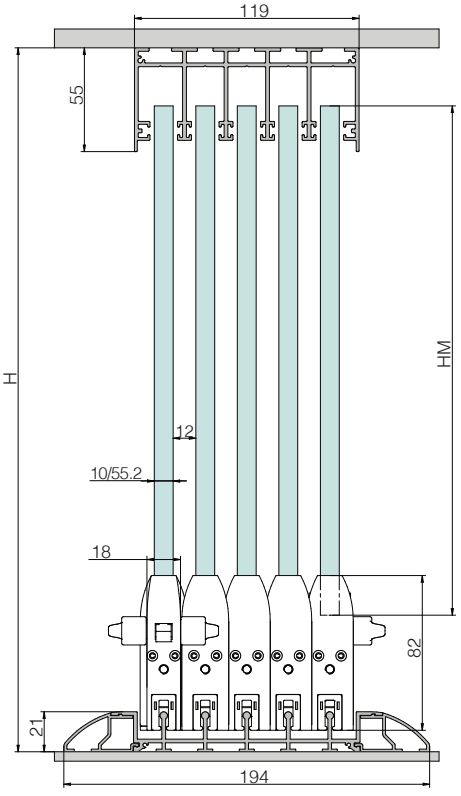

HM = H - 104

Goose beak

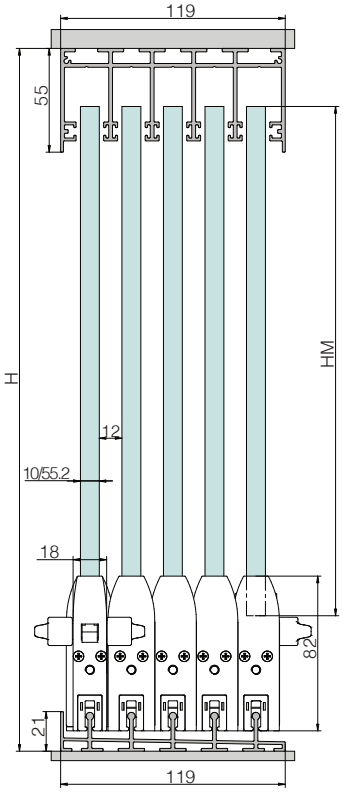

HM = H - 104

Surface-mounted

PROFILE RANGE - 5-RAIL

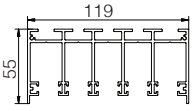

Upper profile

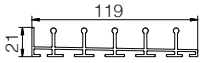

Surface-mounted

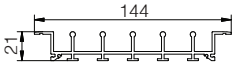

Recessed

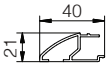

Goose beak

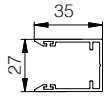

Side profile

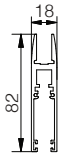

Clamp profile

SLIDING FLOOR | 6-RAIL

all-glass sliding system with ABS technology

6-rail

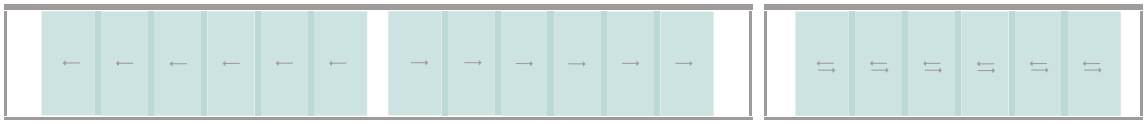

Bi-parting opening
L Max 15,600 mm (614.2")

Single opening
L Max 7,800 mm (307.1")

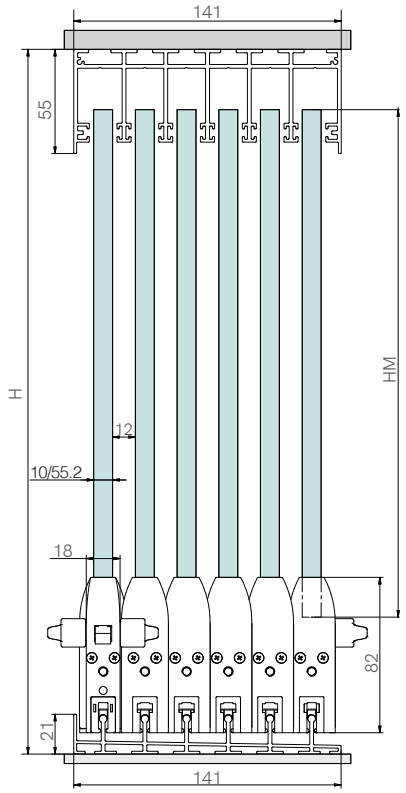

HM = H - 104

Surface-mounted

PROFILE RANGE - 6-RAIL

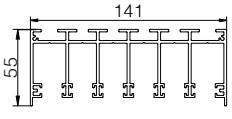

Upper profile

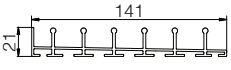

Surface-mounted

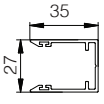

Side profile

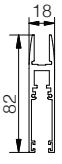

Clamp profile

SLIDING FLOOR | GENERAL SPECIFICATIONS

all-glass sliding system with ABS technology

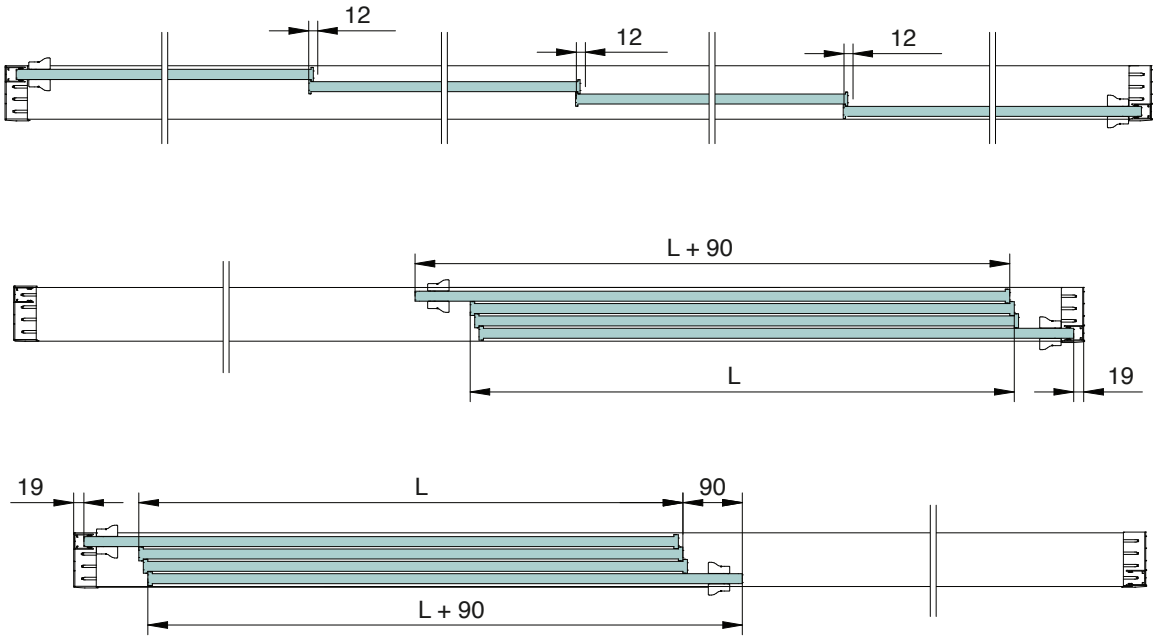

LIBRA

all-glass stacking system, bottom-rolling

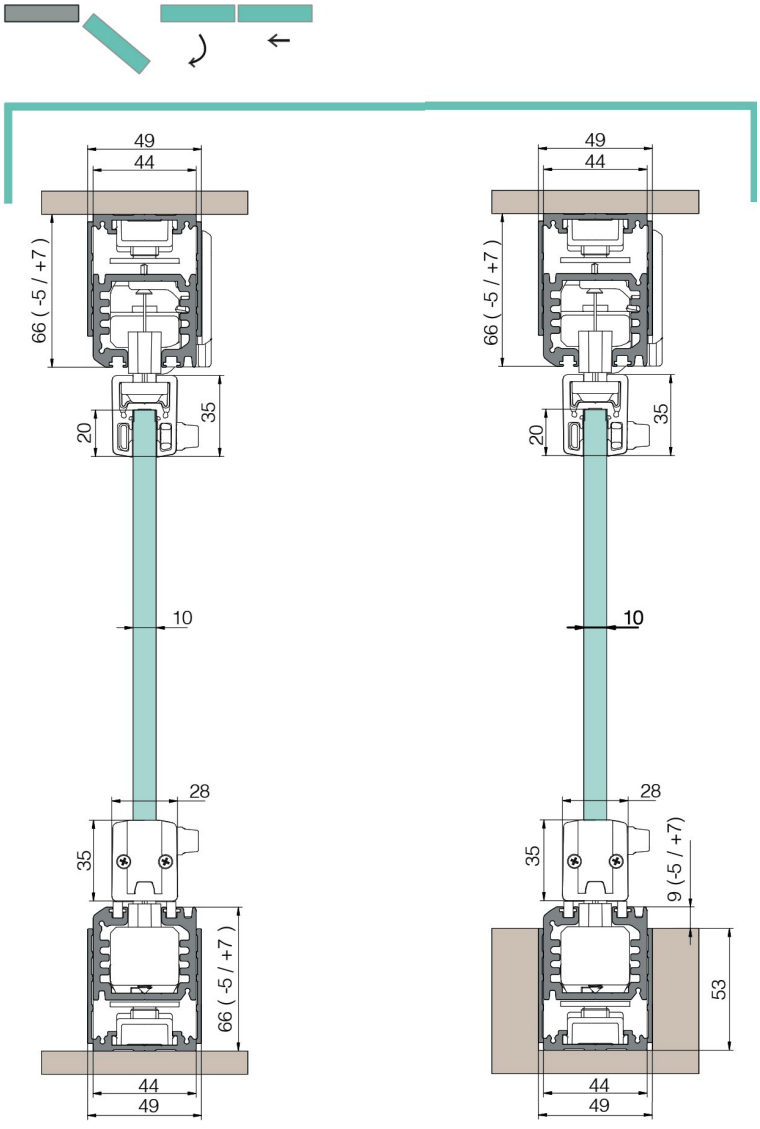

Standard lower guide

Recessed lower guide

PROFILE RANGE

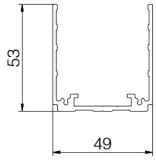

Compensation profile

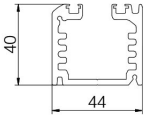

Sliding profile

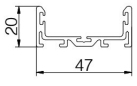

Side profile

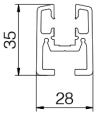

Panel profile

LIBRA | CONFIGURATIONS

all-glass stacking system, bottom-rolling

Linear with
opening on one side

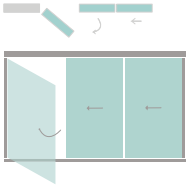

Linear with
opening on both sides

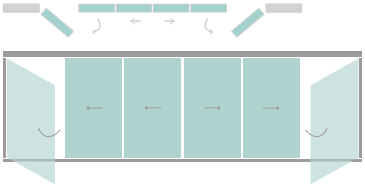

90° corner(s) with opening on one side





90° corner(s) with opening on both sides





With angles other than 90°

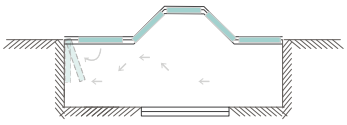

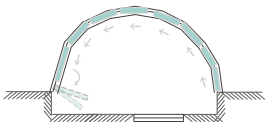

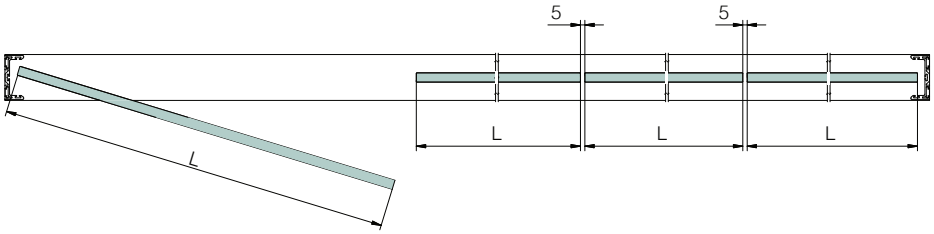

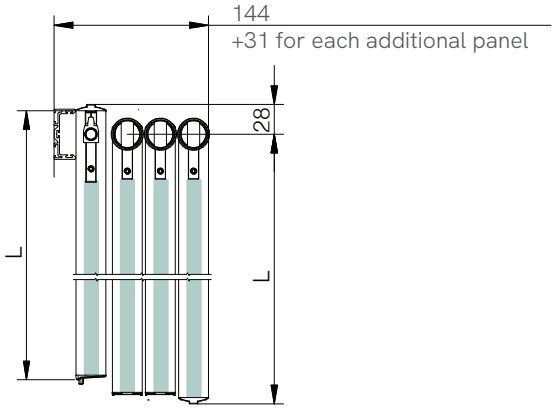

STARGLASS

all-glass top-hung stacking system



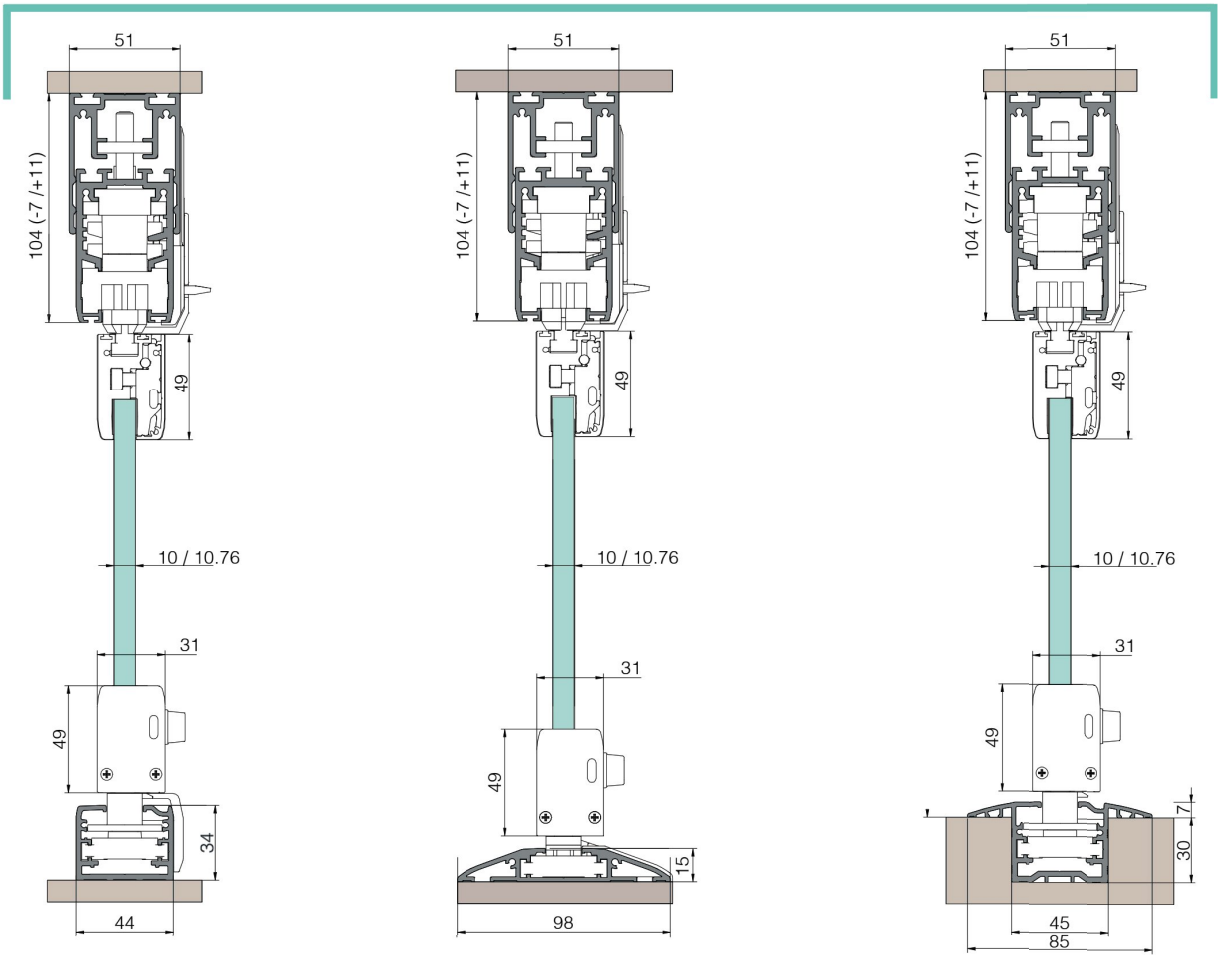

Lower guide H=34 with anti-condensation

Lowered lower guide H=15

Recessed lower guide

PROFILE RANGE

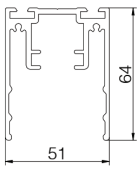

Compensation profile

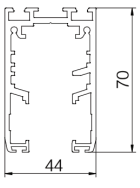

Sliding profile

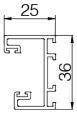

Side profile

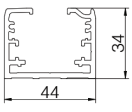

Lower guide H=34 mm with anti-condensation

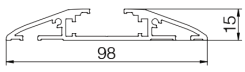

Lowered lower guide H=15 mm

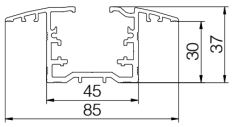

Recessed lower guide

STARGLASS | CONFIGURATIONS

all-glass top-hung stacking system

Linear with
opening on one side

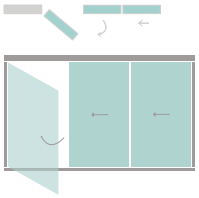

Linear with
opening on both sides

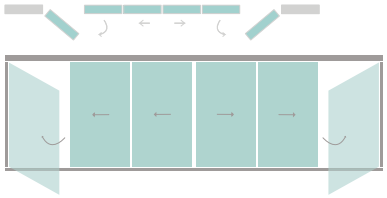

90° corner(s) with opening on one side





90° corner(s) with opening on both sides





With angles other than 90°

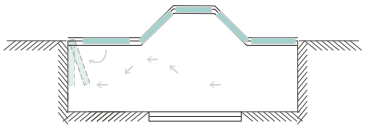

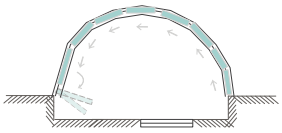

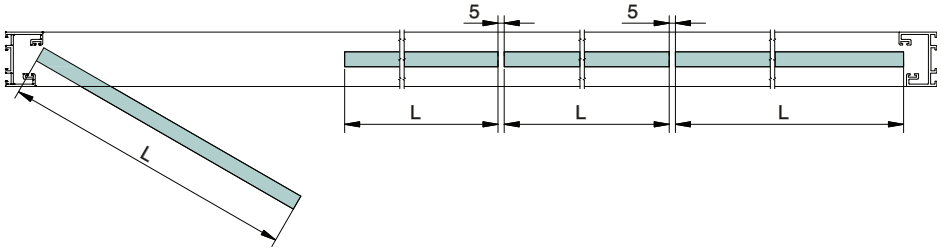

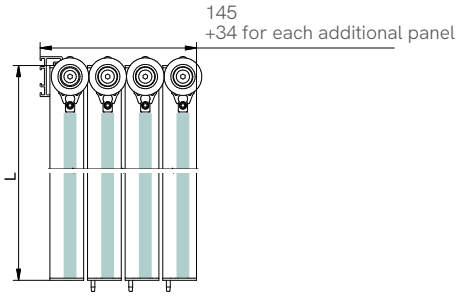

FOLDING CENTRAL

all-glass bifold system

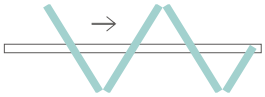

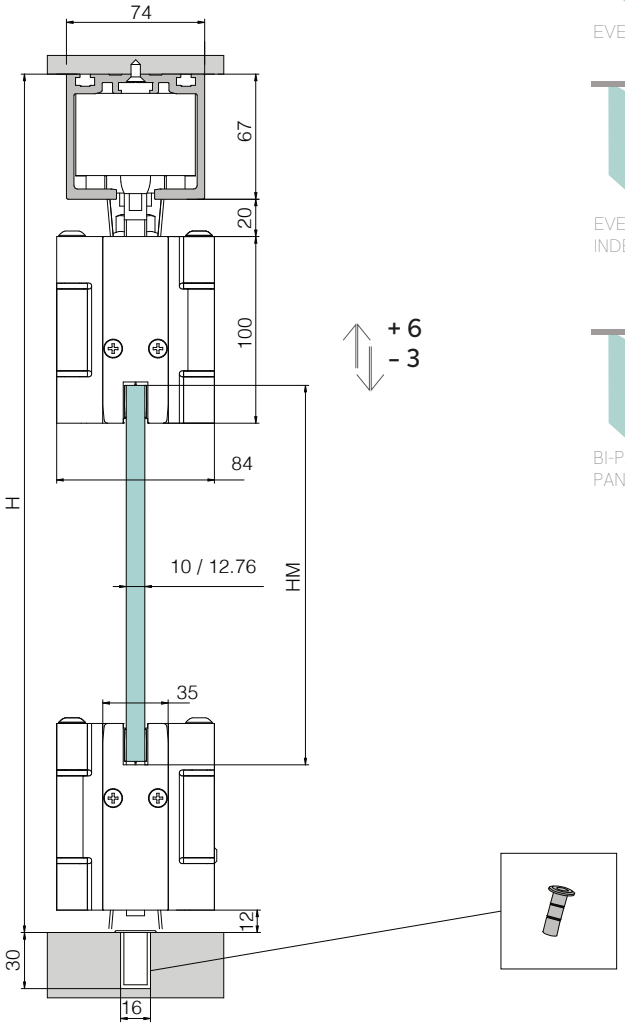

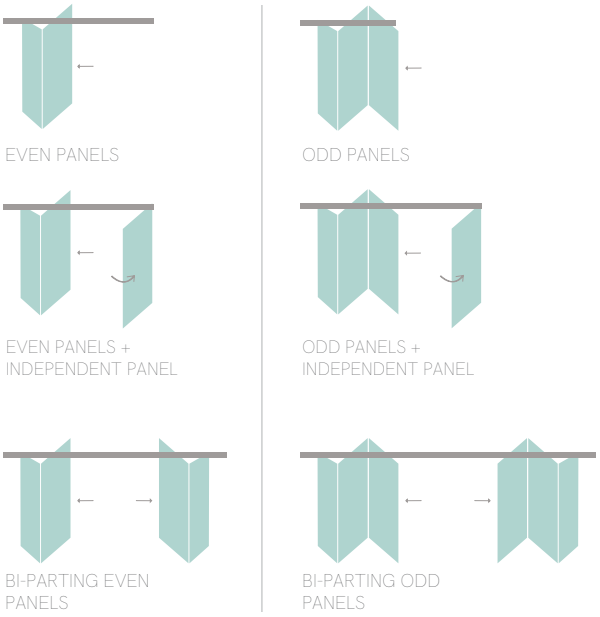

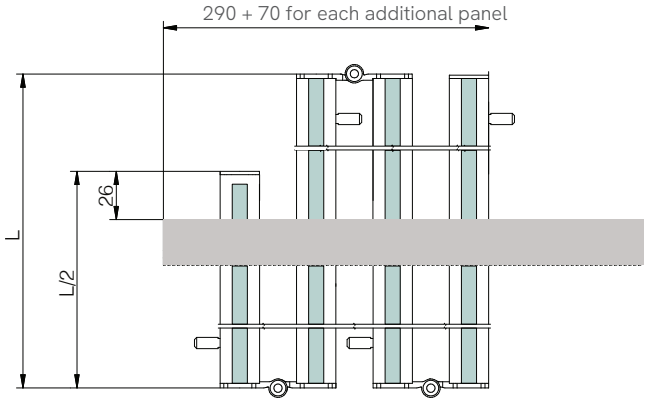

PROFILE RANGE

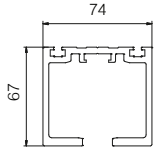

Sliding profile

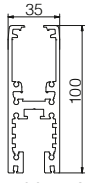

Load-bearing
clamp profile

FOLDING LATERAL

all-glass bifold system

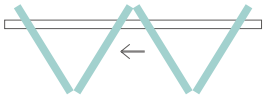

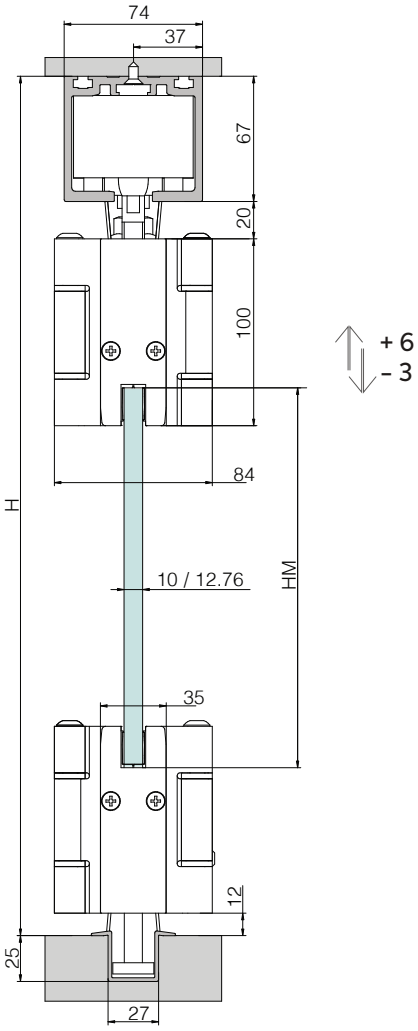

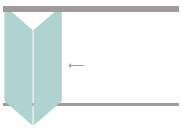

EVEN PANELS

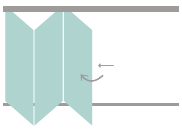

ODD PANELS - THE LAST PANEL IS ALWAYS HINGED

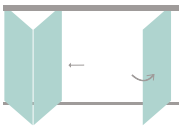

EVEN PANELS + INDEPENDENT PANEL

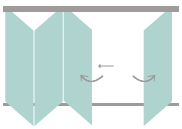

ODD PANELS, LAST PANEL HINGED + INDEPENDENT PANEL

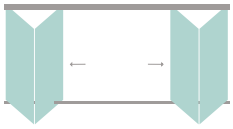

BI-PARTING EVEN PANELS

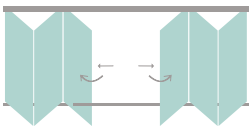

ODD PANELS - THE LAST PANEL IS ALWAYS HINGED

PROFILE RANGE

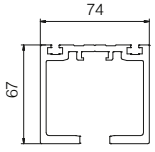

Sliding profile

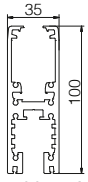

Load-bearing clamp profile

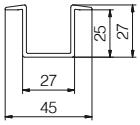

Side profile

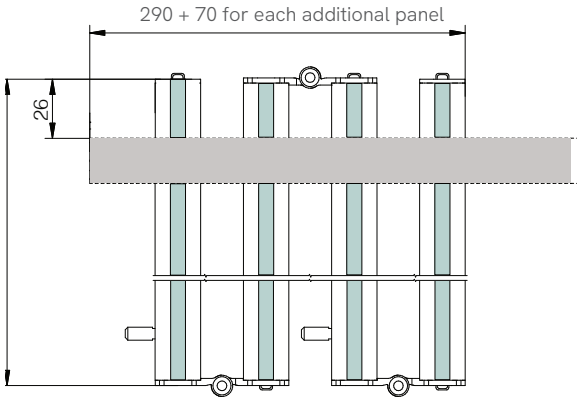

PARKING

all-glass stacking system with unlimited panels

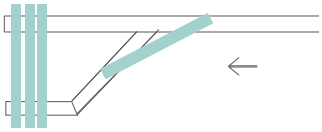

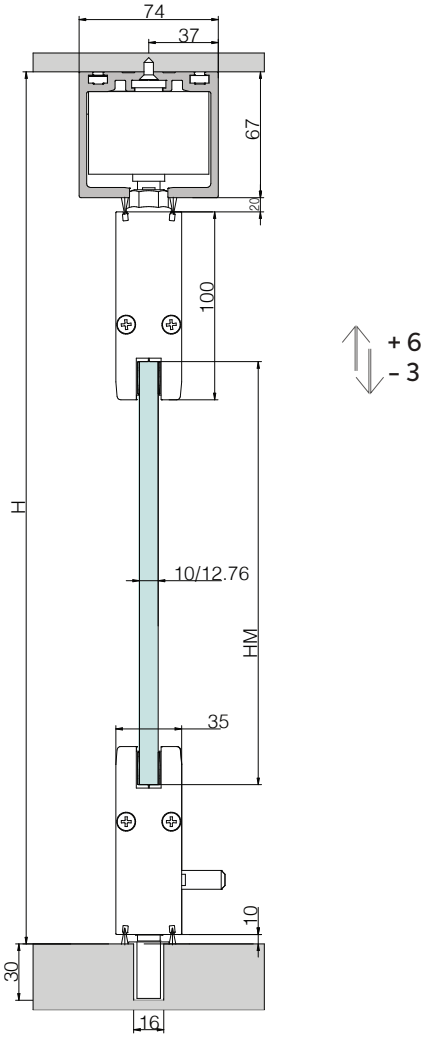

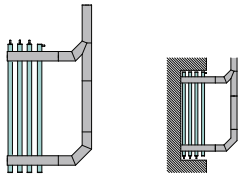

Stacking bay parallel to the profile

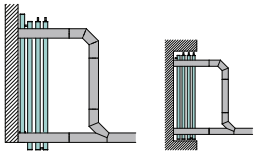

Stacking bay perpendicular
to the profile

PROFILE RANGE

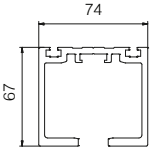

Sliding profile

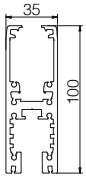

Load-bearing
clamp profile

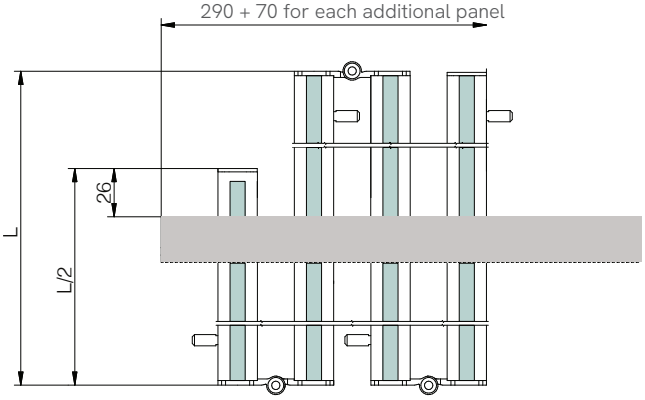

PARKING | CONFIGURATIONS

all-glass stacking system with unlimited panels

90° corner(s) with opening on one side



90° corner(s) with opening on both sides



With angles other than 90°



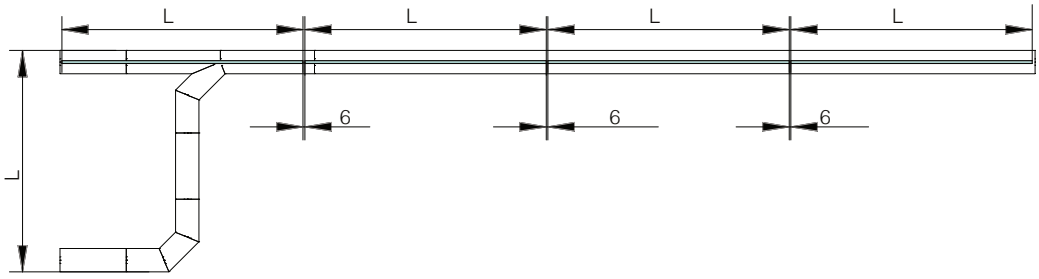

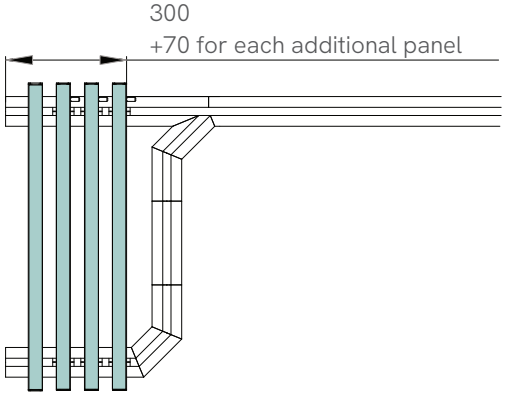

FUSION WALL MOUNT

framed sliding door system

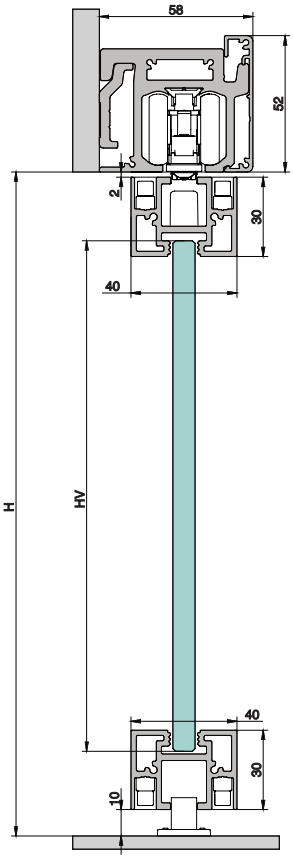

1-RAIL

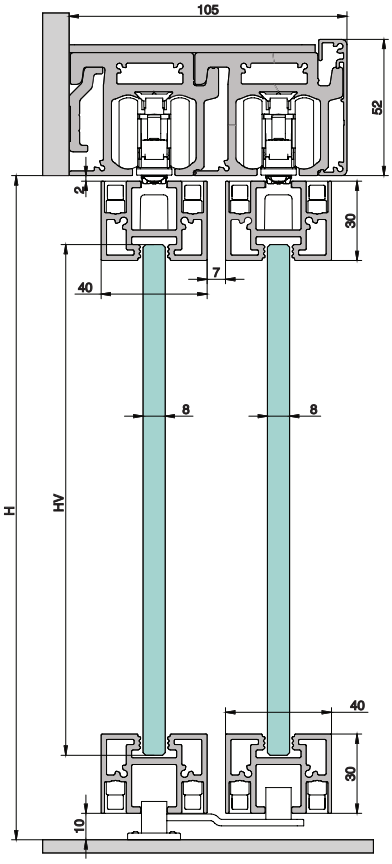

2-RAIL

PROFILE RANGE

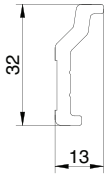

Wall support profile

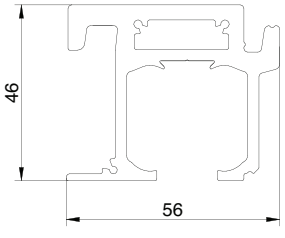

Wall sliding profile

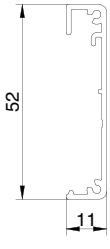

Wall cover profile

FUSION CEILING MOUNT

framed sliding door system

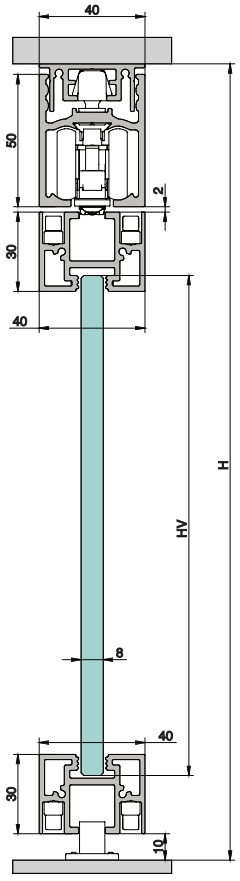

1-RAIL

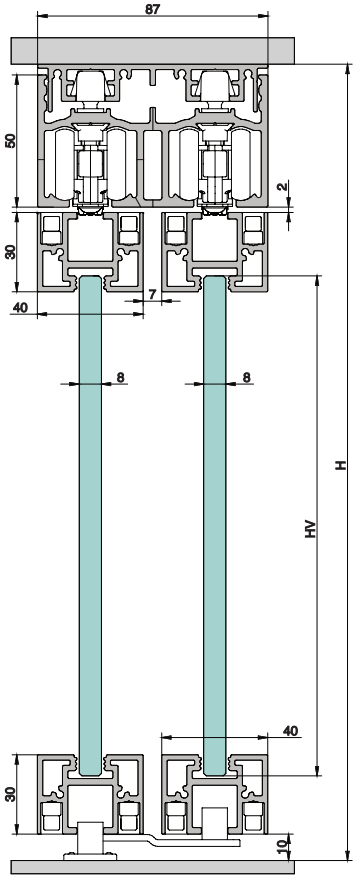

2-RAIL

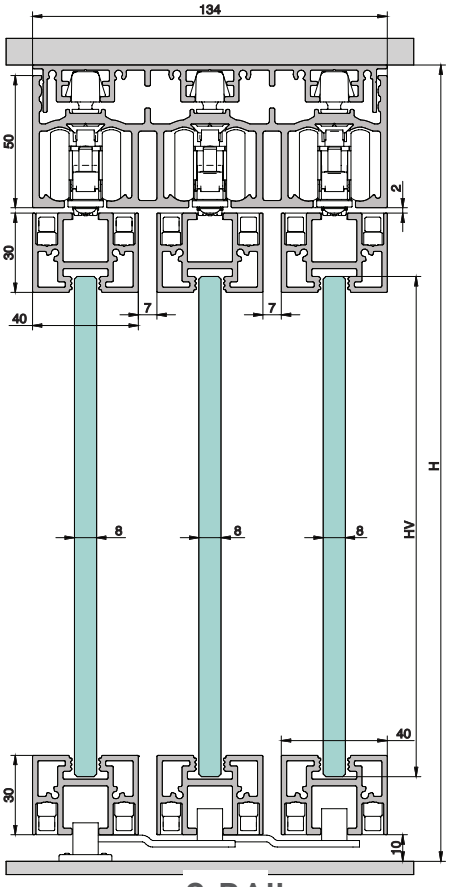

3-RAIL

PROFILE RANGE

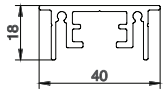

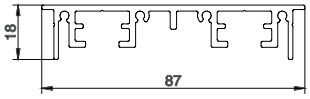

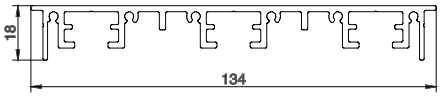

Ceiling support profile 1-2-3-RAIL

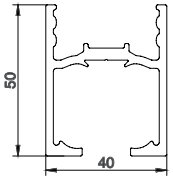

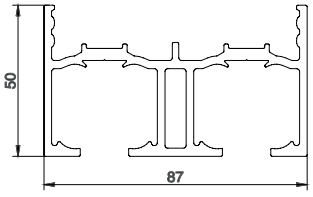

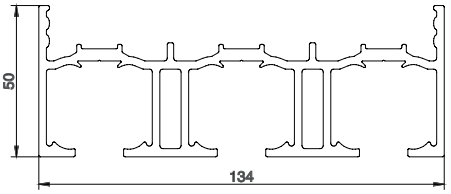

Sliding track 1-2-3-RAIL

FUSION SUSPENDED CEILING MOUNT

framed sliding door system

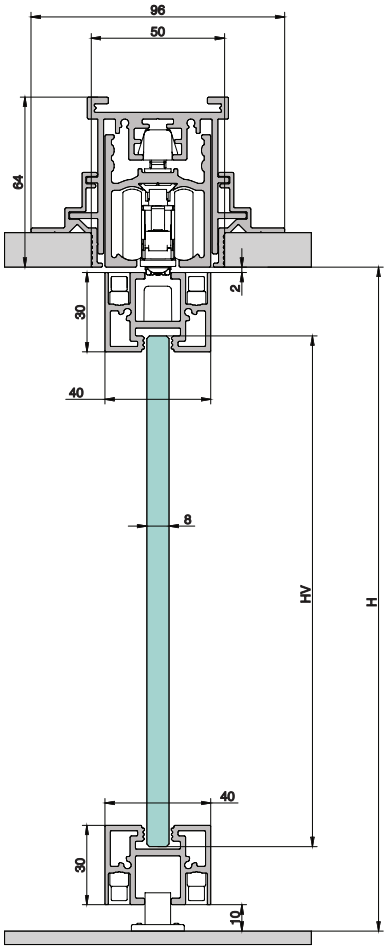

1-RAIL

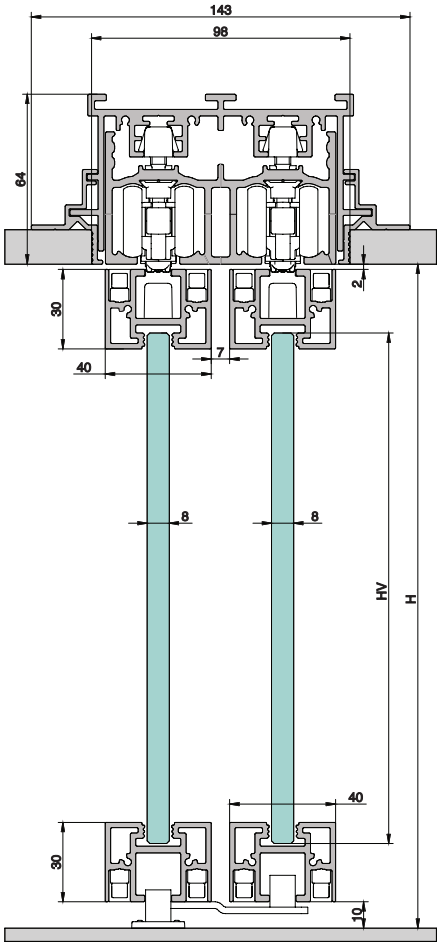

2-RAIL

PROFILE RANGE

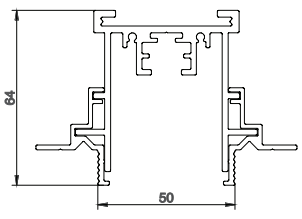

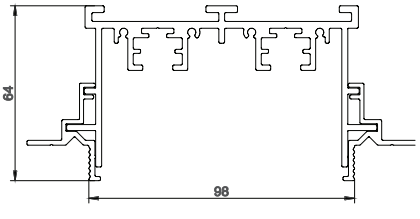

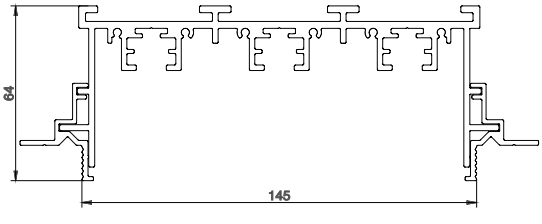

Suspended-ceiling housing 1-2-3-RAIL

FUSION SUSPENDED CEILING MOUNT

framed sliding door system

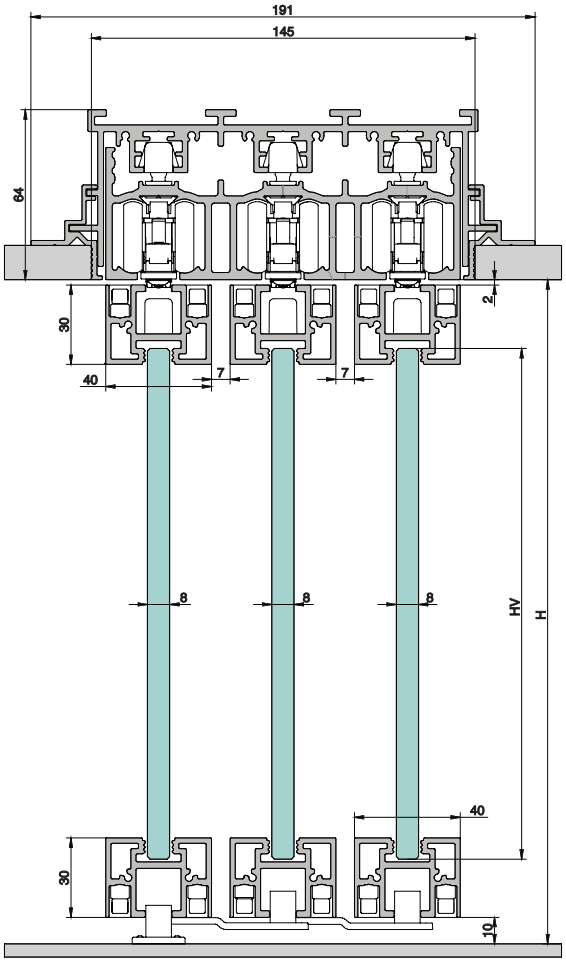

3-RAIL

PROFILE RANGE

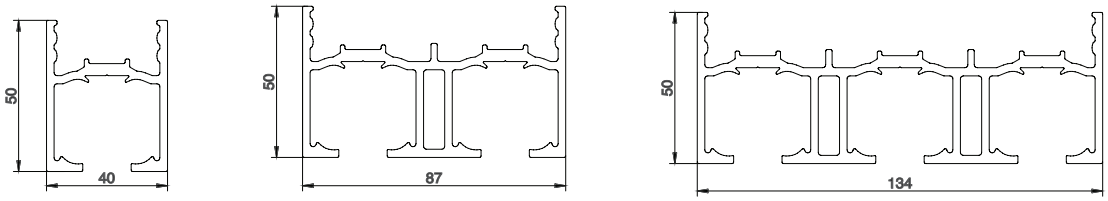

Sliding track 1-2-3-RAIL

MAGLEV

magnetic-levitation sliding door system

RECESSED SINGLE-RAIL

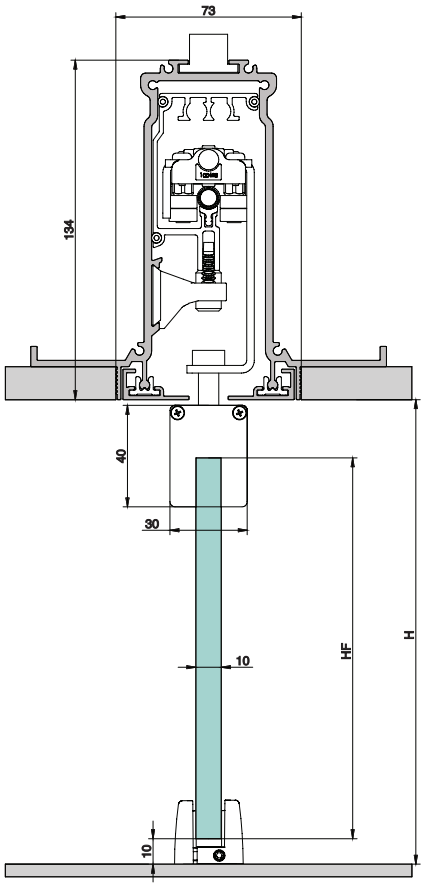

WALL SINGLE-RAIL

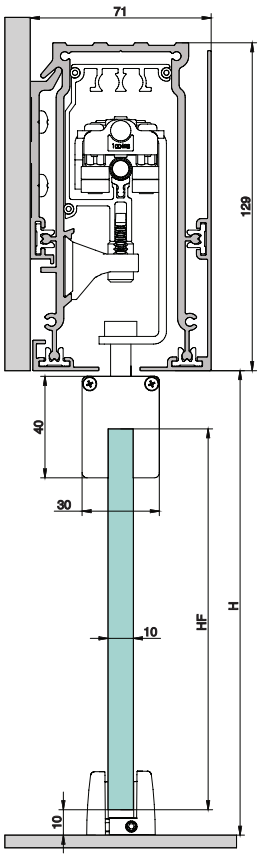

CEILING SINGLE-RAIL

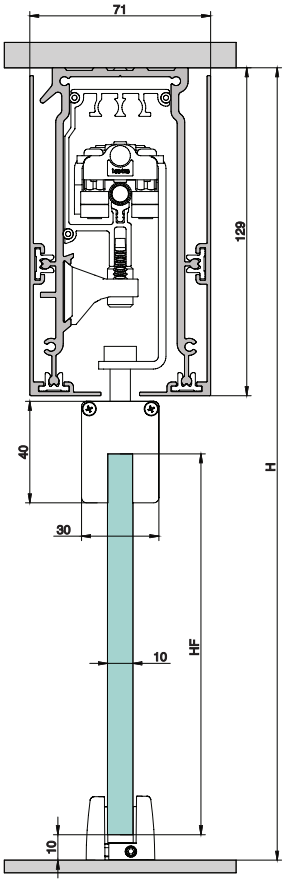

PROFILE RANGE

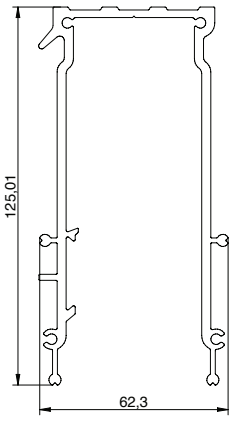

Sliding profile

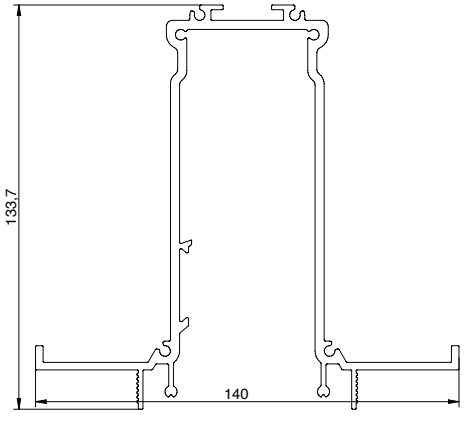

Ceiling recess housing

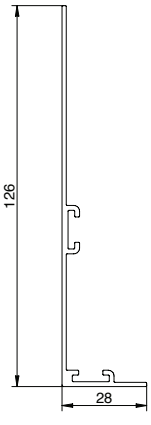

Side cover trim

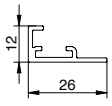

Lower cover

FRONTAL

synchronized sliding door system and partition wall profiles

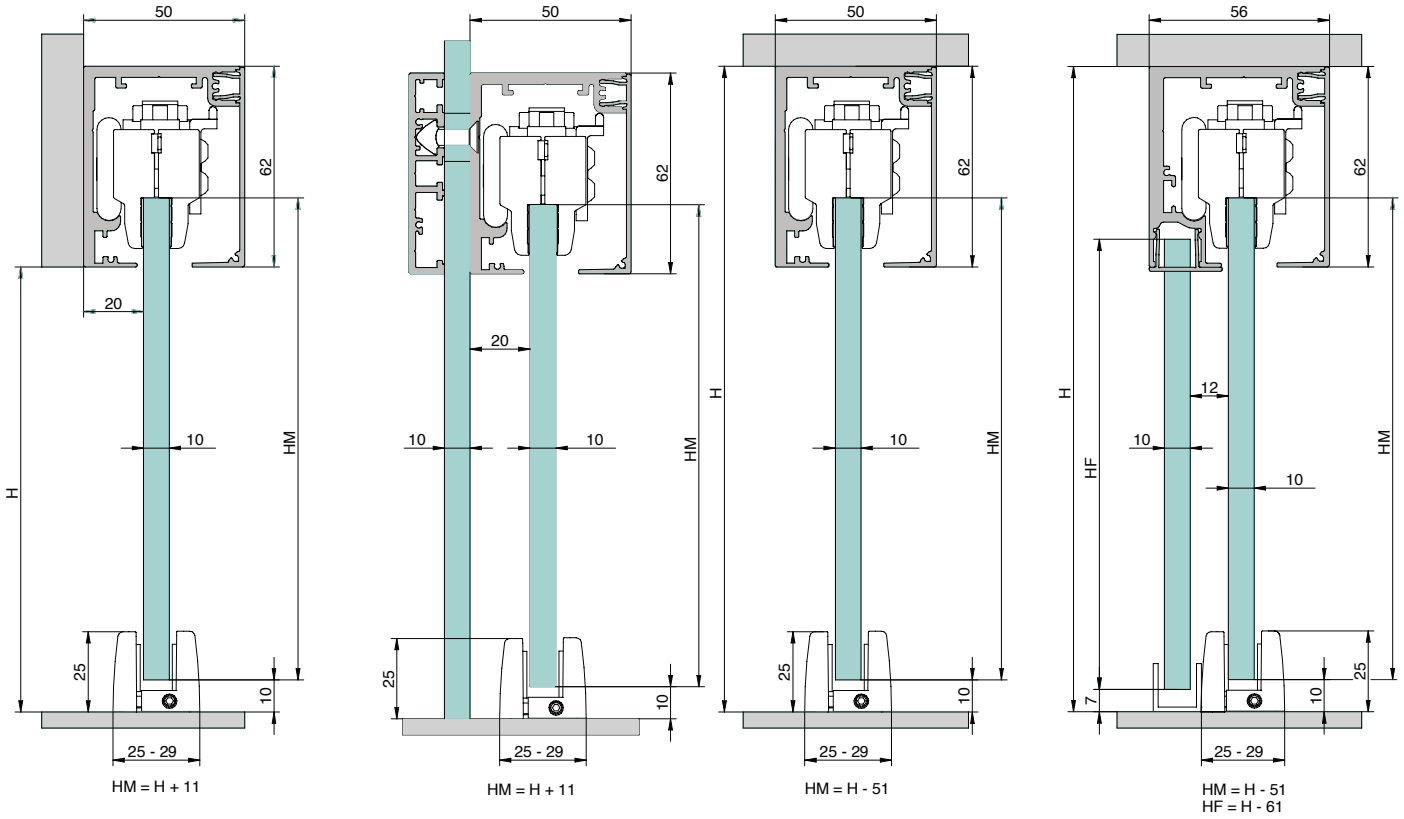

PROFILE RANGE

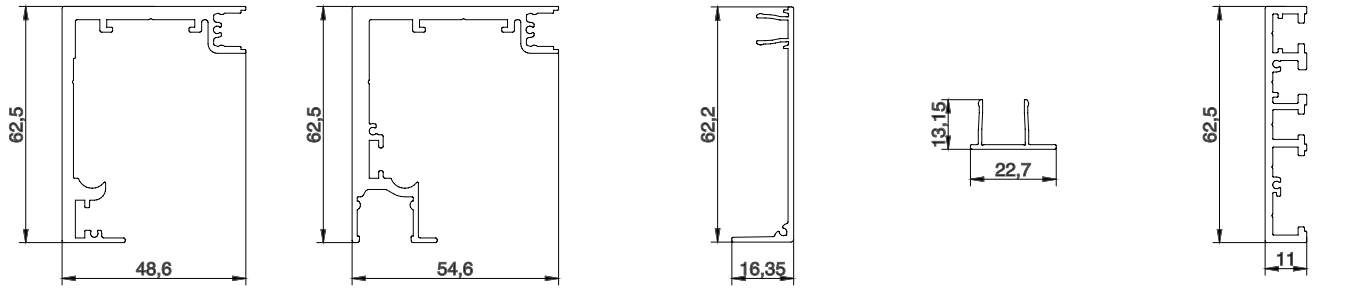

Single-door sliding profile

Fixed-glass sliding profile

Side cover trim

Fixed-glass cover

Glass profile mount

FRONTAL OFFICE

synchronized sliding door system and partition wall profiles

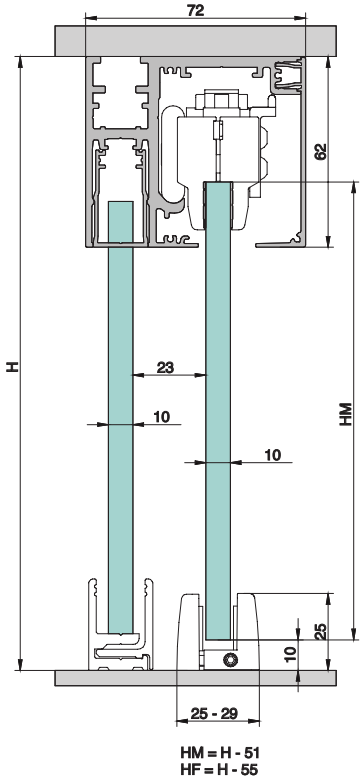

PROFILE RANGE

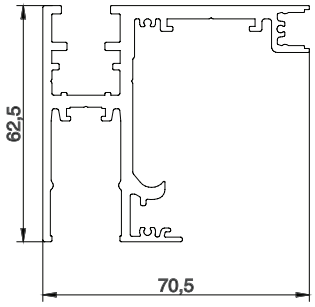

Fixed-glass sliding profile

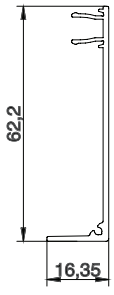

Side cover trim

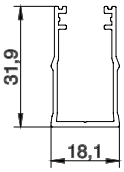

Fixed-glass cover

PRATIK

telescopic sliding door system

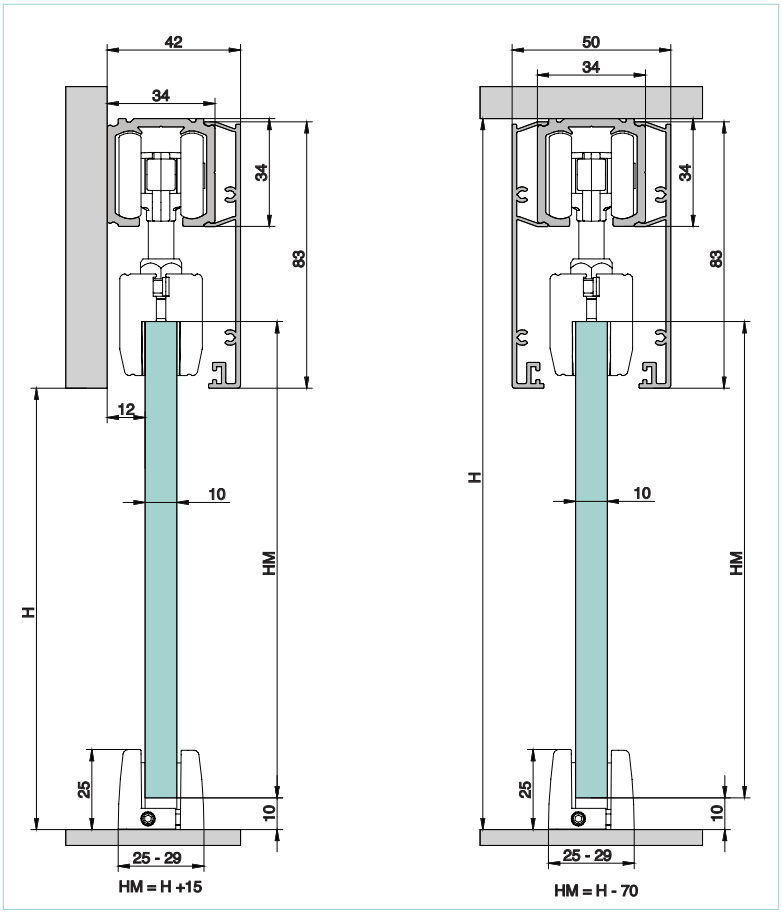

PROFILE RANGE

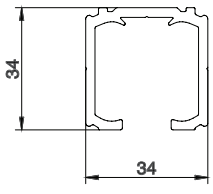

Single-door sliding profile

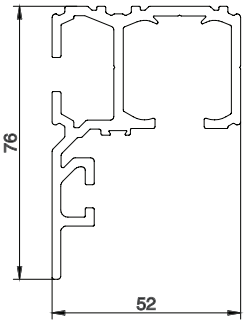

Fixed-glass sliding profile

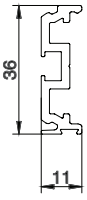

Spacer profile

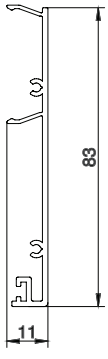

Cover trim H83

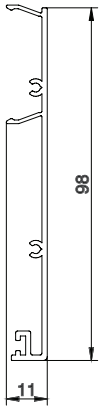

Cover trim H98

PRATIK

telescopic sliding door system

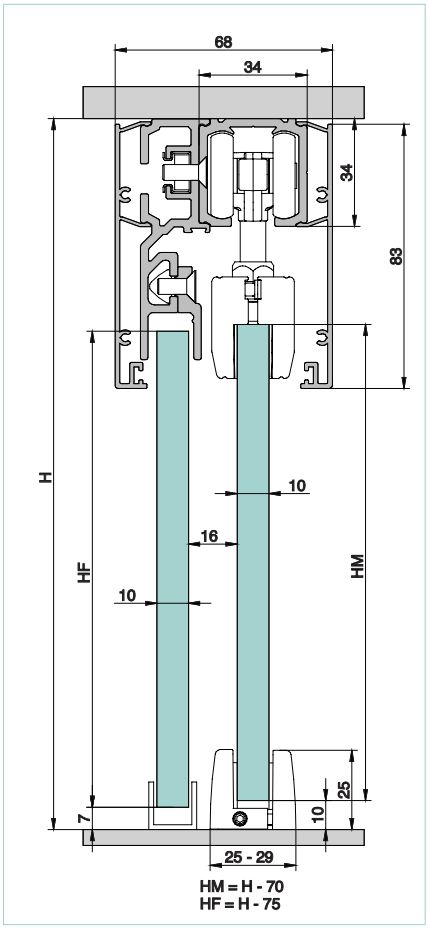

PROFILE RANGE

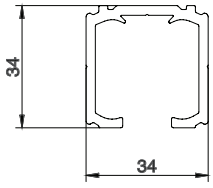

Single-door sliding profile

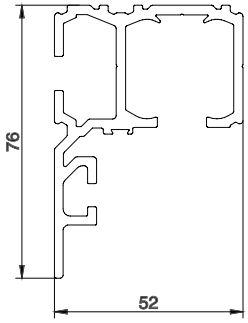

Fixed-glass sliding profile

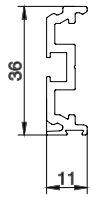

Spacer profile

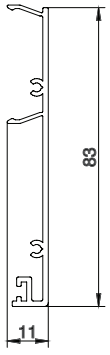

Cover trim H83

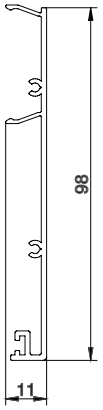

Cover trim H98

PRATIK SIMULTANEOUS TELESCOPIC

simultaneous telescopic sliding door system

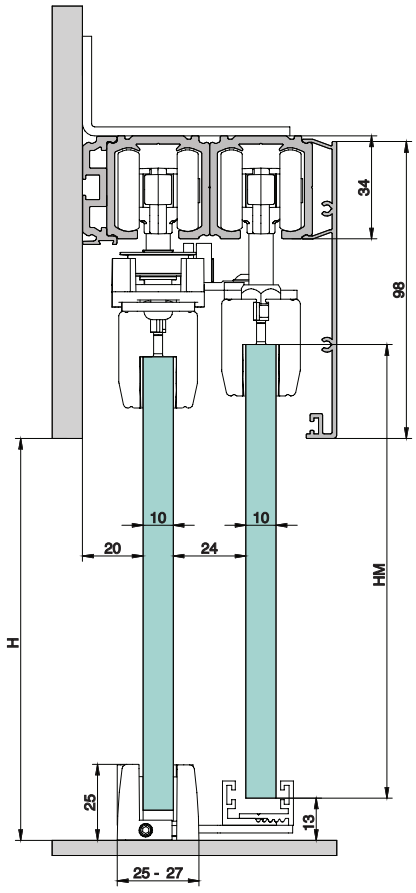

HM = H+ 15

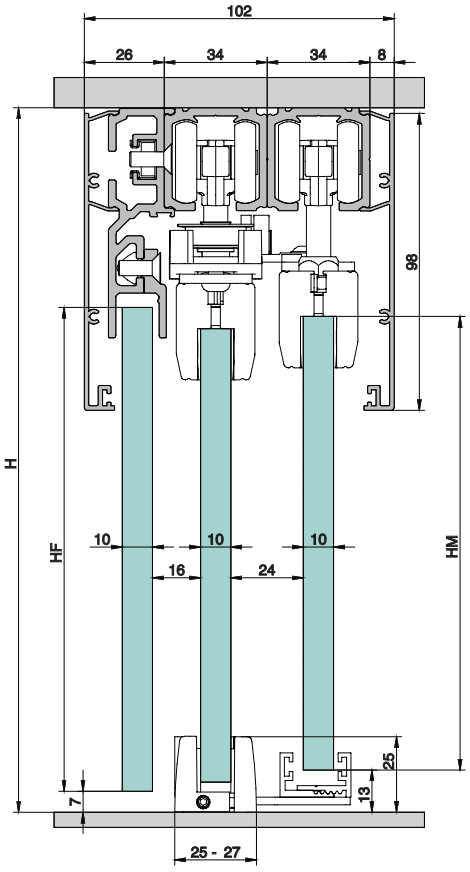

HM = H - 87
HF = H - 75

PROFILE RANGE

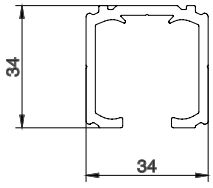

Single-door sliding profile

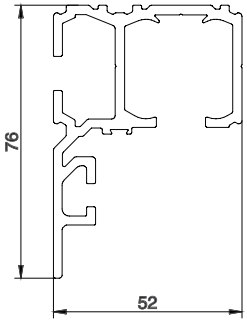

Fixed-glass sliding profile

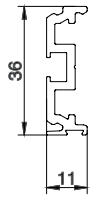

Spacer profile

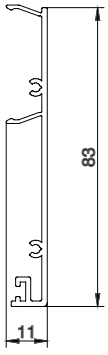

Cover trim H83

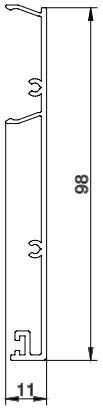

Cover trim H98

PRATIK SIMULTANEOUS TELESCOPIC

simultaneous telescopic sliding door system

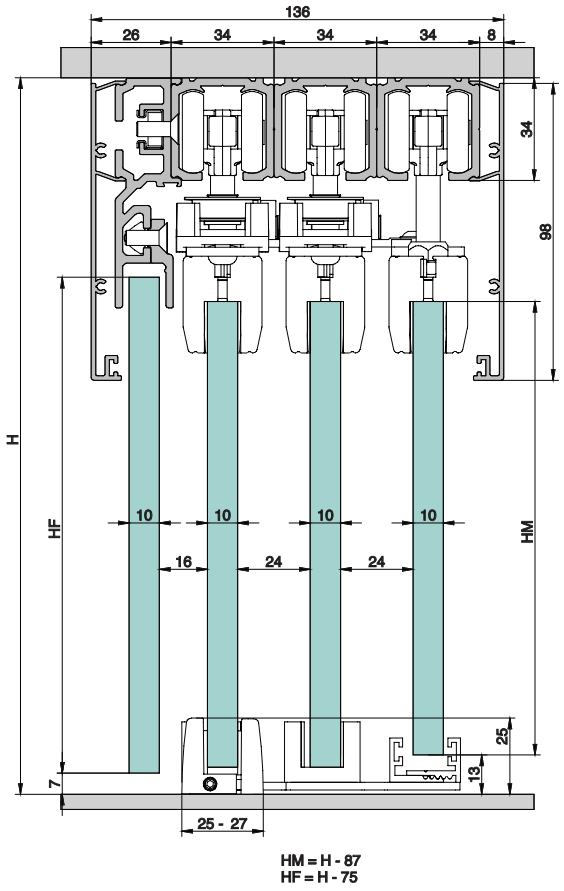

PROFILE RANGE

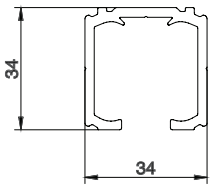

Single-door sliding profile

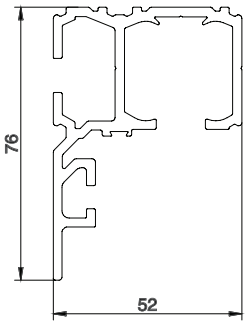

Fixed-glass sliding profile

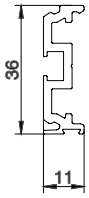

Spacer profile

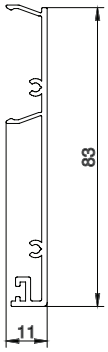

Cover trim H83

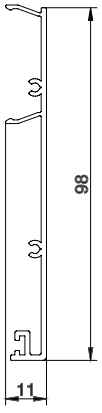

Cover trim H98

PRATIK MECHANICAL TELESCOPIC

mechanical telescopic sliding door system

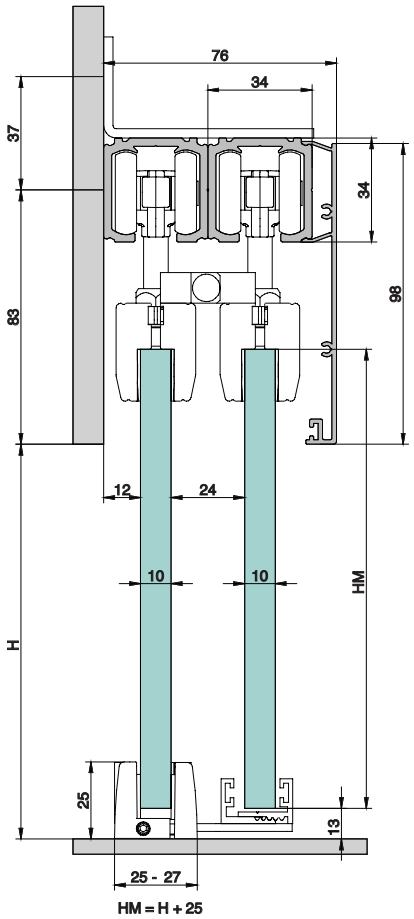

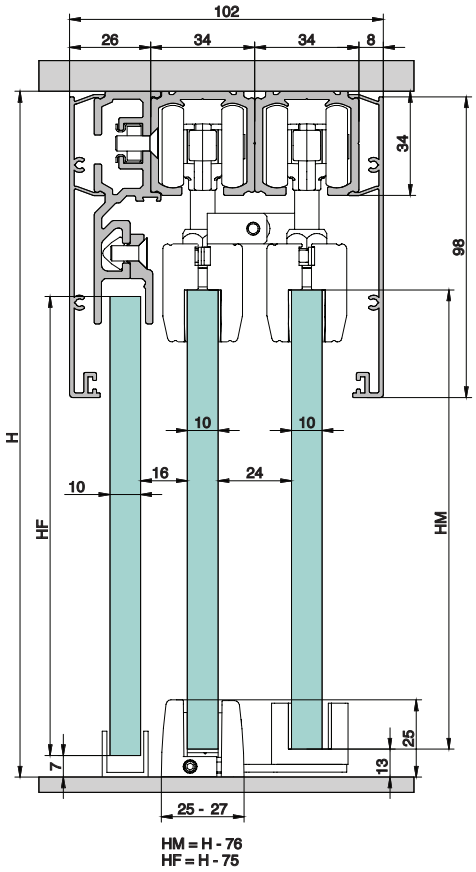

PROFILE RANGE

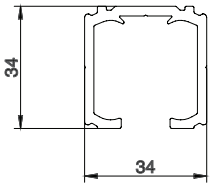

Single-door sliding profile

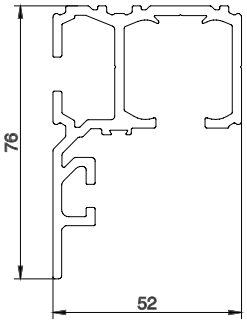

Fixed-glass sliding profile

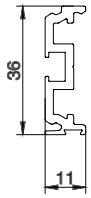

Spacer profile

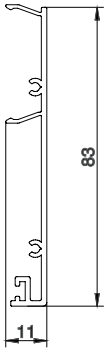

Cover trim H83

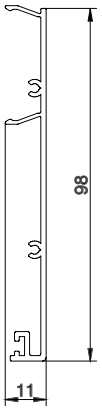

Cover trim H98

PRATIK MECHANICAL TELESCOPIC

mechanical telescopic sliding door system

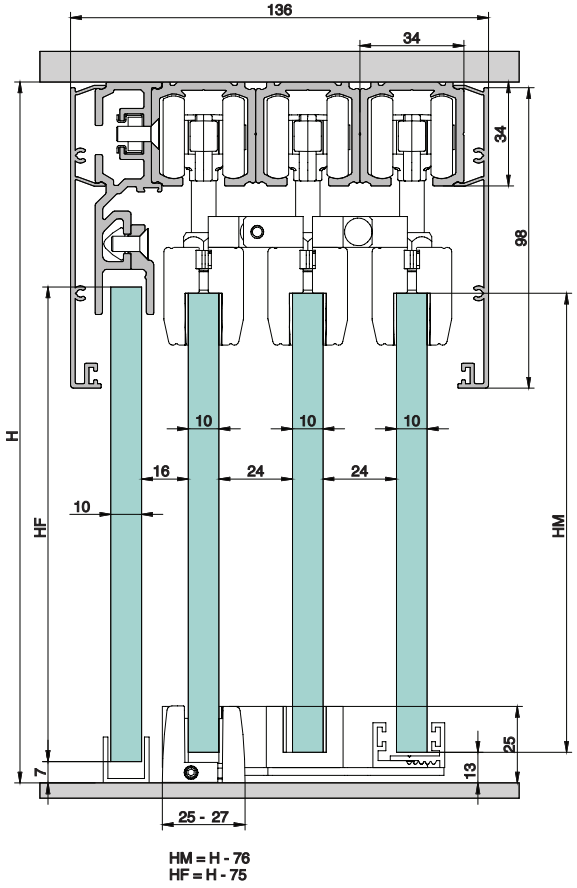

PROFILE RANGE

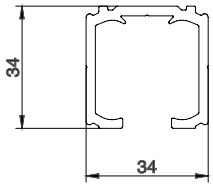

Single-door sliding profile

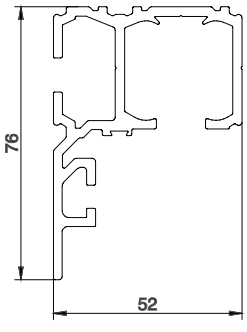

Fixed-glass sliding profile

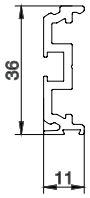

Spacer profile

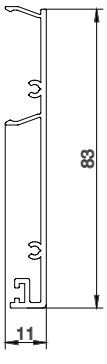

Cover trim H83

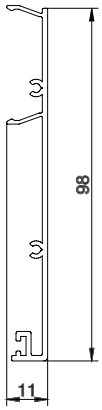

Cover trim H98

CASPER

flush-to-ceiling sliding door system

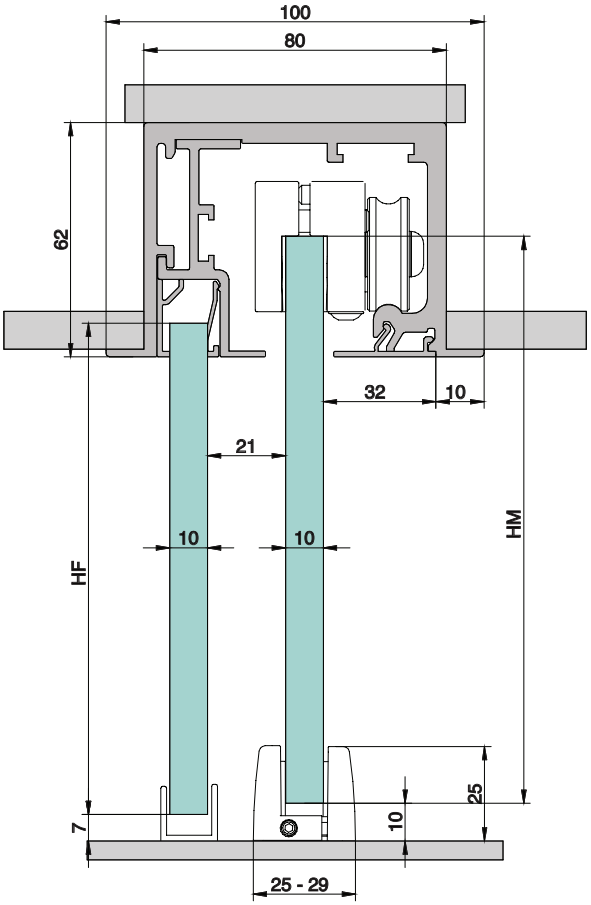

HM = H - 41
HF = H - 60

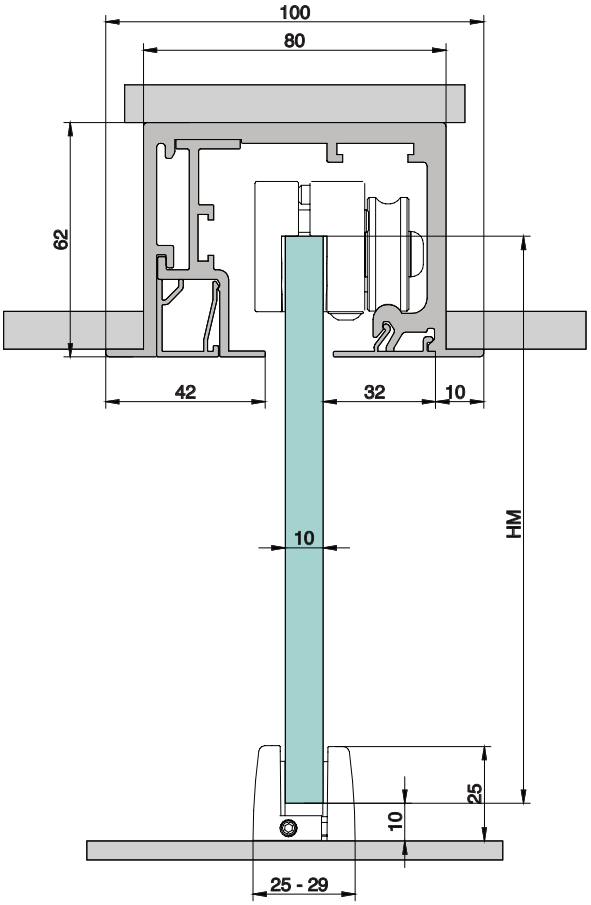

HM = H - 41

PROFILE RANGE

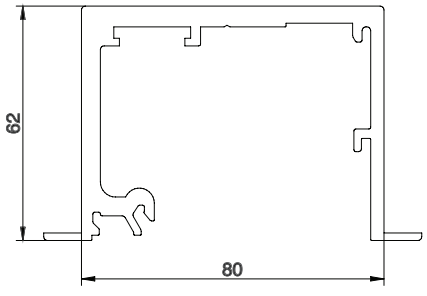

Sliding profile

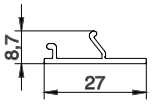

Finish cover

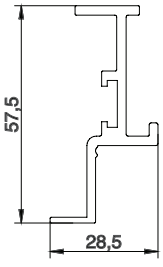

Fixed-glass profile

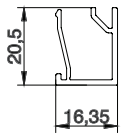

Fixed-glass cover

SKY | 1-RAIL

flush-to-ceiling sliding door system

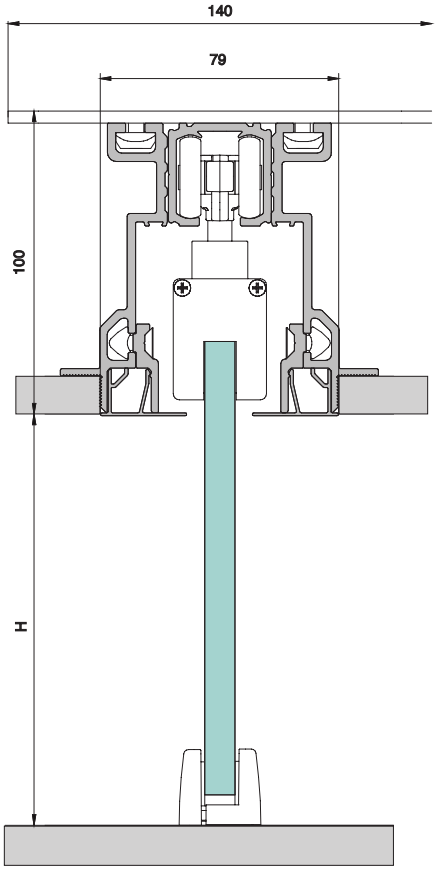

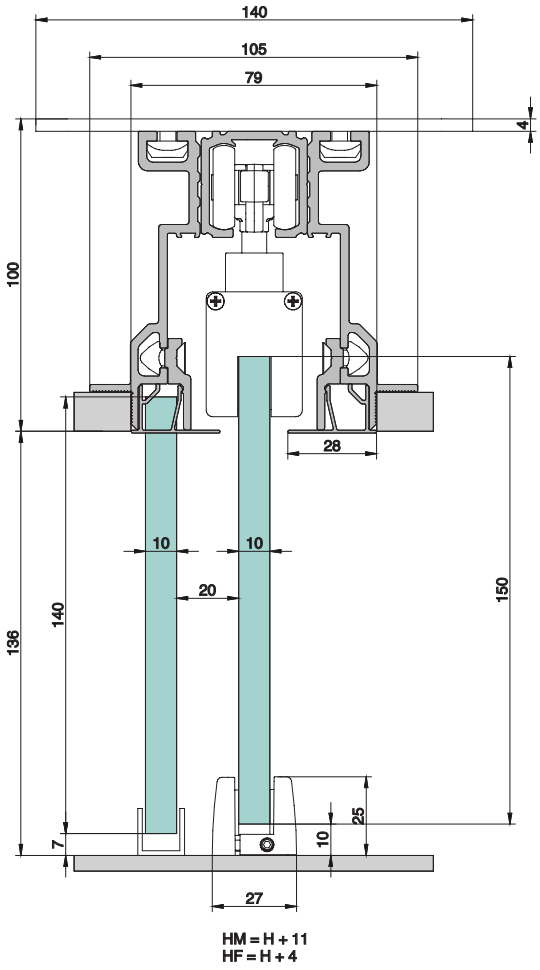

PROFILE RANGE

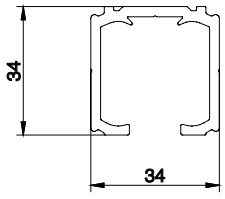

Single-door sliding track

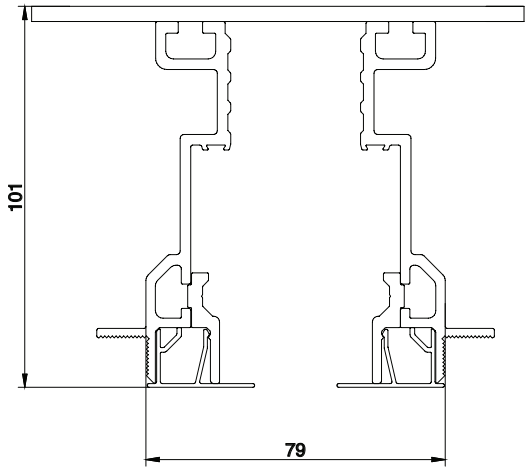

Suspended-ceiling housing 1-RAIL

SKY | 2-RAIL

flush-to-ceiling sliding door system

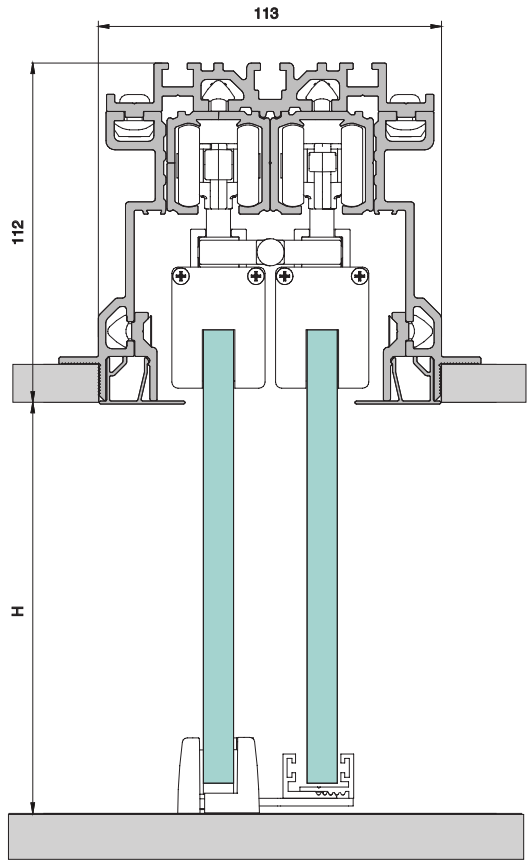

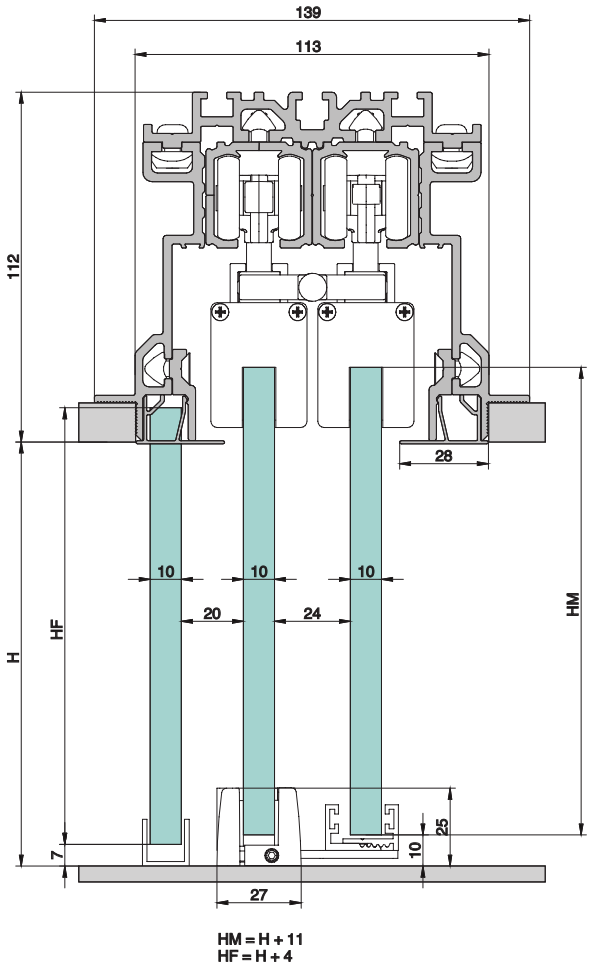

PROFILE RANGE

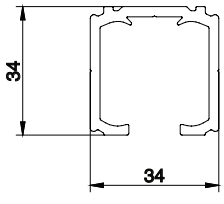

Single-door sliding track

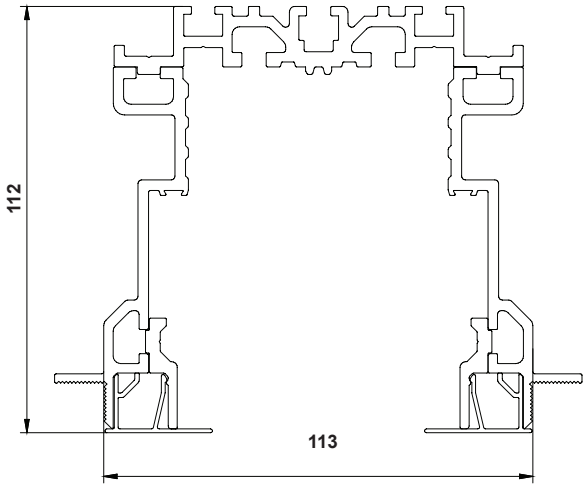

Suspended-ceiling housing 2-RAIL

SHOWER

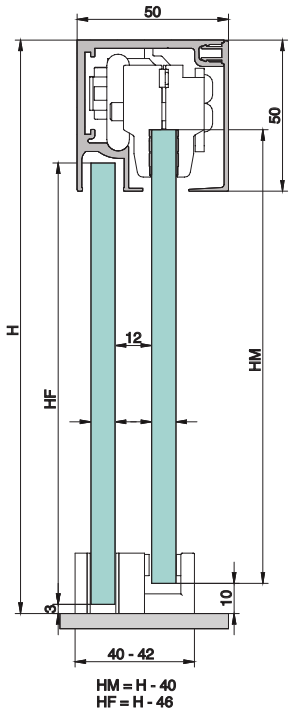

GHIBLI QUADRO

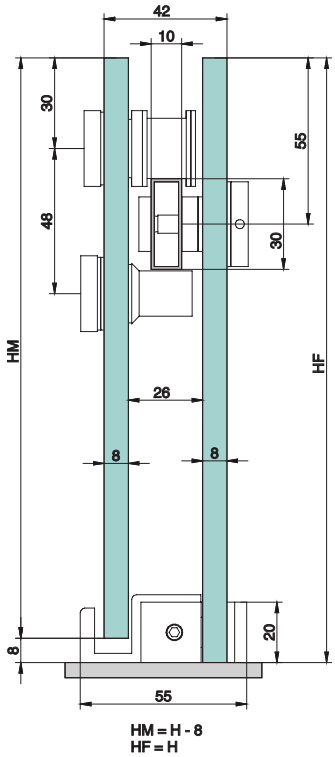

LUX

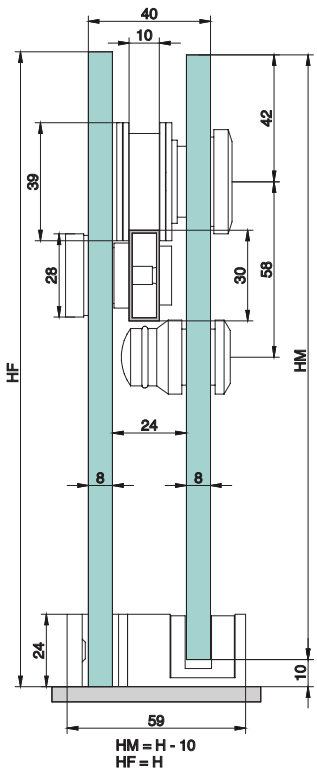

PROFILE RANGE

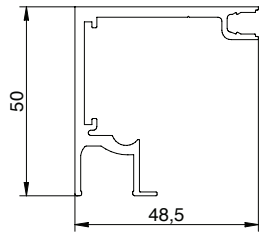

Sliding profile

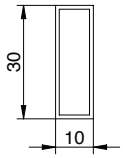

Sliding profile

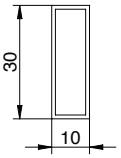

Sliding profile

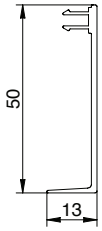

Side cover trim

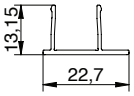

Fixed-glass cover

POCKET GLASS

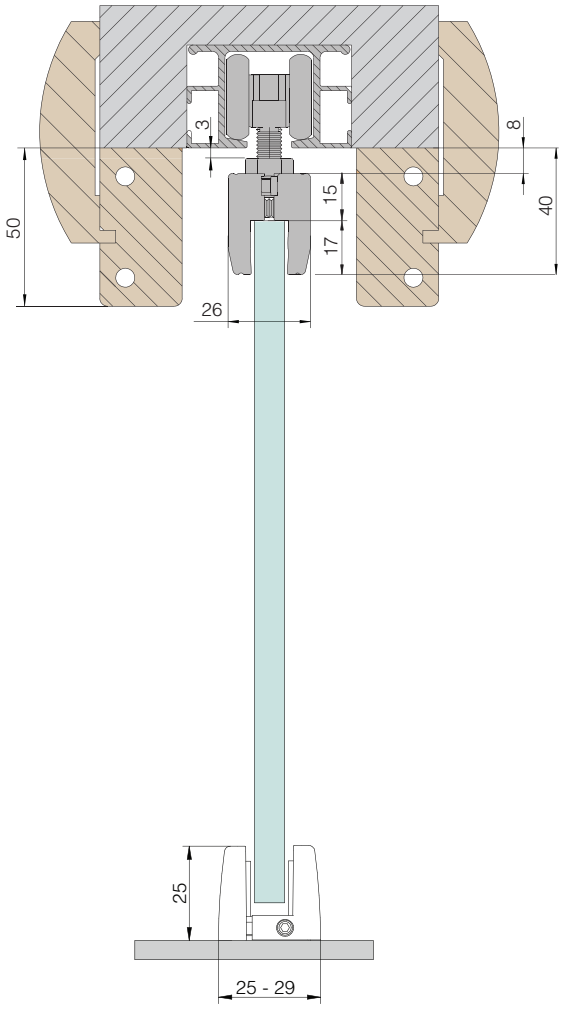

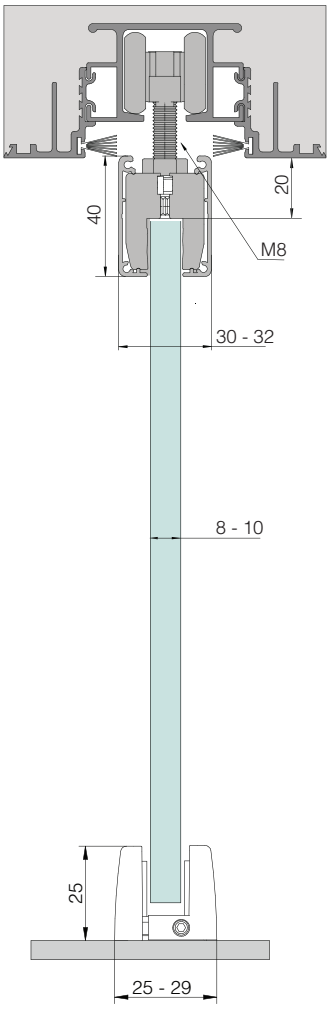

PROFILE RANGE

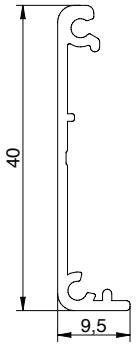

Clamp cover

FIXY

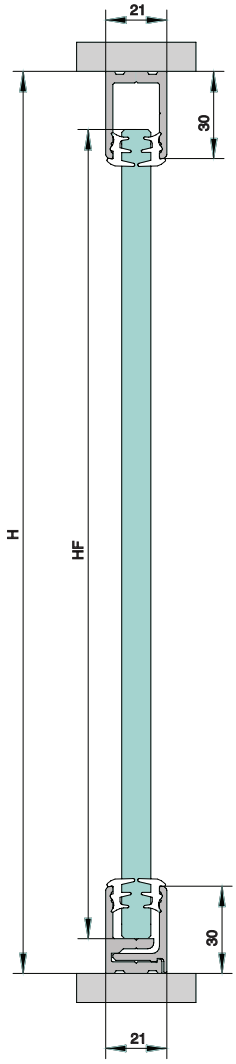

PROFILE RANGE

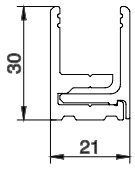

Snap-fit profile

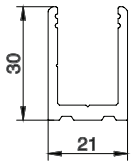

U-profile

GALAXY

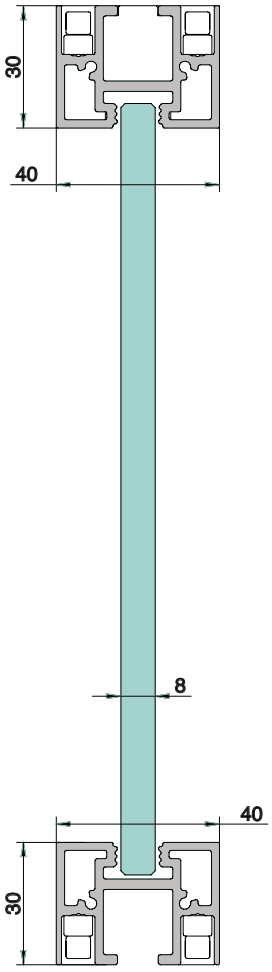

PROFILE RANGE

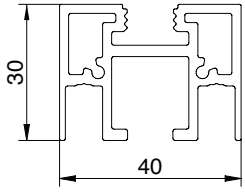

Door top/bottom profile

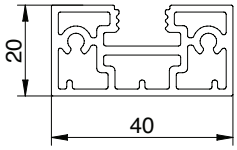

Door side profile

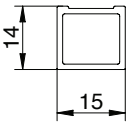

Intermediate door rail

MG-LOCK LOCK

Lock / lock - Mc Slide double knob

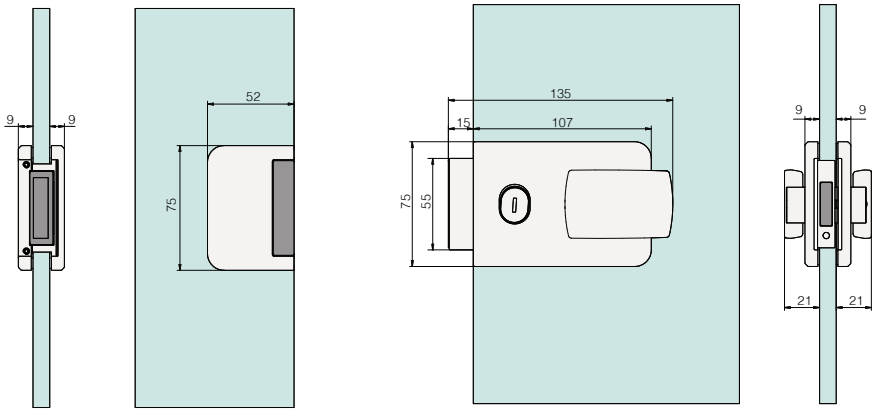

GLASS FABRICATION

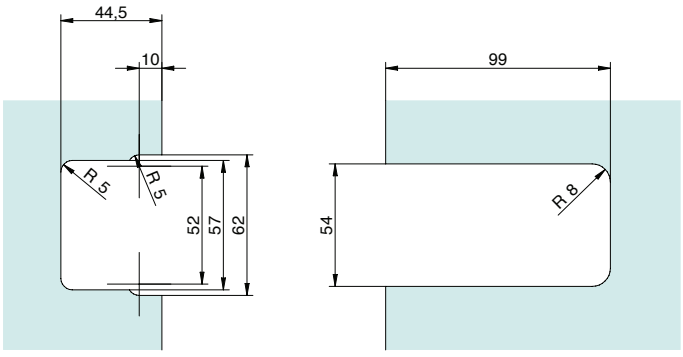

Strike plate

Lock

MG-LOCK LOCK

Inside thumb-turn - Mc Slide knob, inside only

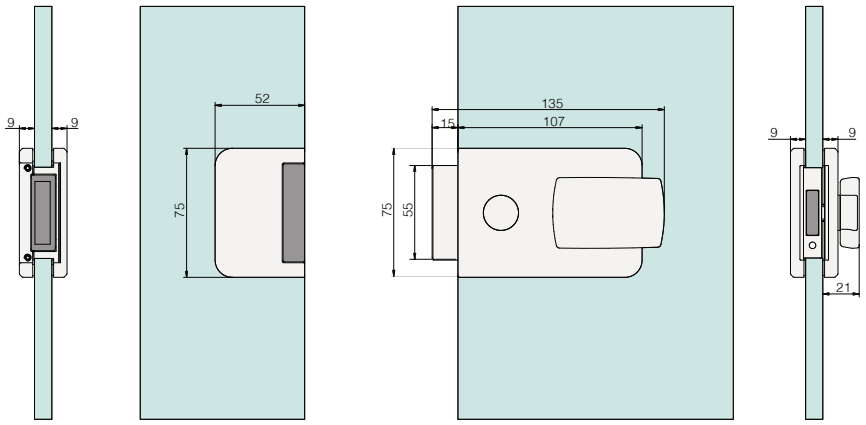

GLASS FABRICATION

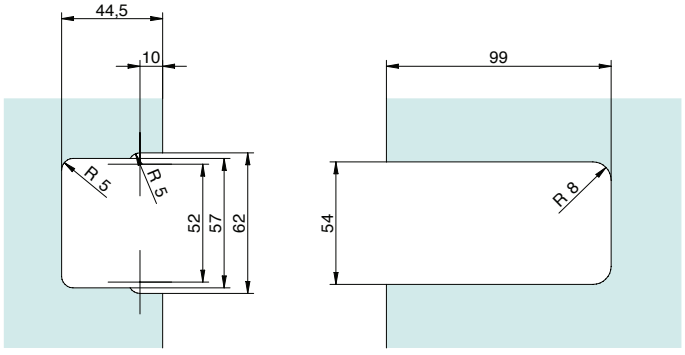

Strike plate

Lock

BLOCK LOCK

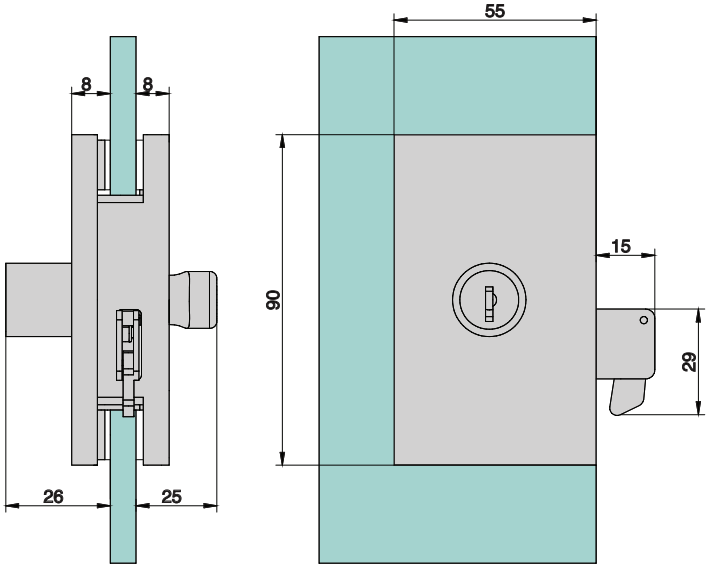

GLASS FABRICATION

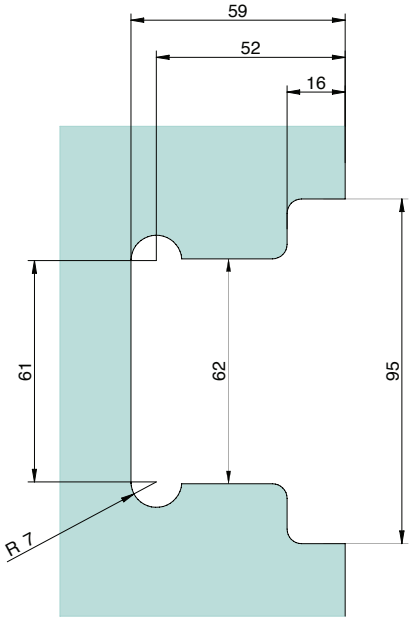

BLOCK lock on Sliding Floor upright

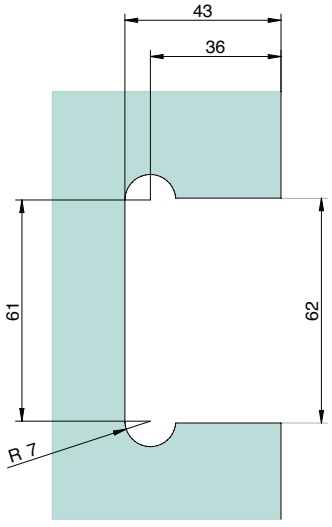

BLOCK lock, standard

BLOCK STRIKE PLATE

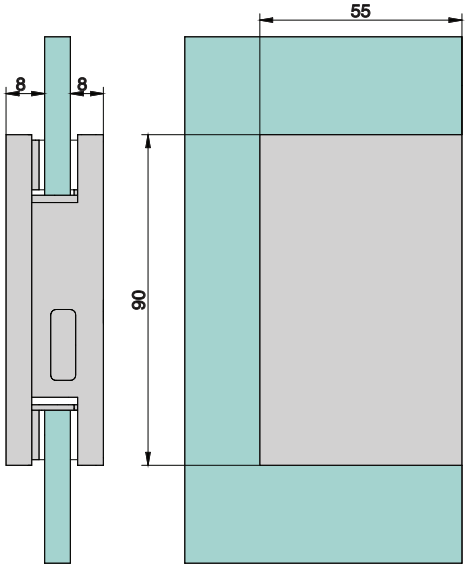

GLASS FABRICATION

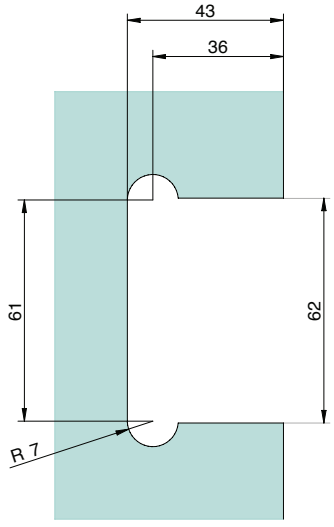

BLOCK strike plate, standard

Mc Slide Indoor | Outdoor sliding glass walls

Mc Slide Indoor | Outdoor sliding glass walls hold product certification based on tests performed at Istituto Giordano, accredited under current European regulations. The certification attests that the system meets safety, performance, and durability requirements, ensuring high performance both indoors and in weather-exposed settings.

CERTIFIED FEATURES

Wind resistance; Verification of structural stability and safety under positive and negative pressure; Air permeability; Measurement of the system's air-tightness level, in compliance with the standards required for indoor and outdoor installation; Watertightness; Assessment of resistance to rainwater infiltration in exposed configurations; Acoustic insulation; Certification of sound-insulation performance for optimized indoor comfort; Durability of components; Cyclic testing of hardware, carriages, and tracks to ensure smooth sliding over time; Glass safety; Compliance with regulations on laminated and/or tempered safety glass.

AREAS OF USE

The certification makes the system suitable for: indoor applications, such as movable partitions, glazed dividers, and functional enclosures; outdoor installations, such as verandas, pergolas, balconies, and lightweight facades, even in areas exposed to severe weather.

BEAUFORT SCALE - UNI EN 13659:2015		
CLASS 1 **Wind: 29 km/h**	Moderate breeze	
CLASS 2 **Wind: 38 km/h**	Fresh breeze	
CLASS 3 **Wind: 48 km/h**	Strong breeze	
CLASS 4 **Wind: 60 km/h**	Near gale	
CLASS 5 **Wind: 76 km/h**	Gale	
CLASS 6 **Wind: 92 km/h**	Strong gale	



STANDARDS AND CERTIFICATIONS

Our systems are efficiently tested in accordance with the following standards:

EXTERIOR SYSTEMS

UNI EN 1026:2016	Windows and doors - Air permeability - Test method
UNI EN 1027:2016	Windows and doors - Watertightness - Test method
UNI EN 12211:2016	Windows and doors - Resistance to wind load - Test method
UNI EN 16361:2016	Power-operated pedestrian doors - Product standard, performance characteristics - Pedestrian doorsets, other than swing type, initially designed for power operation
UNI EN 12208:2000	Windows and doors - Watertightness - Classification
UNI EN 13049:2023	Windows - Soft and heavy body impact - Test method, safety requirements and classification
UNI EN 13659:2015	Shutters and external venetian blinds - Performance requirements including safety
UNI EN 1932:2013	External blinds and shutters - Resistance to wind loads - Test method and performance criteria
UNI 11998:2025	Removable glazed systems - Classification, functional and performance characteristics

INTERIOR SYSTEMS

UNI EN 1527:2022	Building hardware - Hardware for sliding doors and folding doors - Requirements and test methods and folding doors - Requirements and test methods

CERTIFIED EXCELLENCE

Innovation and quality are the pillars of our business, ensuring customers superior standards of excellence. The certifications and attestations issued by the Istituto Giordano testify to our ongoing commitment to safety and reliability.

QUALITY CONTROL AND TECHNOLOGICAL INNOVATION

Every system undergoes rigorous performance testing in-house on certified, approved test benches to guarantee reliability and high performance. Drawing on the expertise of the Mc Slide team, we harness technological progress to offer cutting-edge, high-quality solutions with a strong focus on environmental sustainability. Our R&D department, staffed by highly specialized engineers, is constantly engaged in research and innovation to continually refine our products. Quality is central to every stage of production, from raw-material selection to the latest manufacturing technologies, and our strategy is built on developing new products and continuously improving existing ones.

CERTIFIED COATING AND OPTIMIZED LEAD TIMES

Mc Slide profiles also deliver excellence in coating, backed by Qualicoat certification, which attests to the quality of the aluminum used in architecture. All our systems are certified to international standards, ensuring weather resistance, durability, and lasting luster. We offer a wide range of colors to meet every aesthetic and design need, with reduced production times. With Mc Slide, you choose design, quality, and innovation.

CERTIFIED RELIABILITY

Mc Slide glass walls undergo rigorous air-tightness, wind-resistance, and watertightness testing, carried out to the highest standards and certified by Istituto Giordano. These tests guarantee excellent performance and deliver products that are safe, reliable, and suited to the widest range of needs.

COMMERCIAL TERMS

This catalog is a sales tool. Please request technical documentation at: info@mcslide.it The technical data in this catalog is indicative; actual products may therefore differ slightly from the dimensions and photographs shown. In any case, the company reserves the right to make any changes and improvements it deems necessary, at its sole discretion, at any time. Sliding systems in the INTERIOR range are intended for indoor use at a minimum temperature of 18°C. We accept no liability for printing errors in the information and dimensions shown in this catalog. Mc Slide srl will not accept any claim for damages without first having had the opportunity to inspect the damage and determine its own liability. In any event, any claim for damages shall be void if the material has been assembled, fabricated, treated, or installed by the customer or by third parties, as the company cannot verify original defects in the semi-finished product after treatment and processing by the customer or third parties. The company may manufacture custom items in specified quantities. Any designs or samples requested by the customer will be charged to the customer if the customer does not confirm series production and the order.

ORDERS

Orders for systems in the EXTERIOR range are confirmed only upon written acceptance of the quotation issued. Shop drawings are issued, as a guide, within 5-10 business days of quotation acceptance. They are based solely on an interpretation of the information provided by the customer, who must therefore, before any approval, carefully check that the technical drawing suits the intended application and promptly notify Mc Slide of any changes, inaccuracies, or requests for clarification. Otherwise, Mc Slide srl shall not be liable for any incompatibility between the system and the project. The customer must carefully verify that the technical drawings meet their design requirements: dimensions, finish, glass thickness, opening direction, and the type and position of stacking bays. Should any inaccuracies or changes be required, the customer must mark them on the drawings and return them to Mc Slide, which will revise them and issue new drawings; this may result in changes to the original quotation, and the new drawings will be sent together with any updates to the quotation and delivery times. Drawings with the final field measurements of the system, which must match the quotation, must be provided by the customer, who assumes full responsibility for having communicated all relevant details. Mc Slide is responsible solely for manufacturing the system as specified in the approved quotation. Delivery times stated in the quotation run from its approval and from the date the deposit is received. Production times do not include transit time to destination; Mc Slide accepts no liability for delivery delays attributable to the carrier. Mc Slide reserves the right to suspend or halt production should any concerns arise regarding the customer's solvency. Any claims relating to defective goods, quantity discrepancies, or incorrect codes with respect to the order confirmed by Mc Slide srl must be noted promptly in writing on the carrier's delivery receipt and confirmed by email or fax within 1 business day of receipt of the goods; otherwise, claims cannot be accepted. Screws and/or anchors for fixing to the support structure are not included.

LEGAL NOTICES

© Worldwide copyright – ALL RIGHTS RESERVED – Mc Slide S.r.l.
All trademarks, logos, texts, photographs, drawings, models, products, and the related intellectual and industrial property rights contained in this catalog are the exclusive property of Mc Slide S.r.l. Any form of reproduction, copying, imitation, publication, dissemination, distribution, adaptation, or use, in whole or in part, of the materials contained in this catalog, including advertising and digital content, without the prior written authorization of Mc Slide S.r.l. is prohibited. Any unauthorized use constitutes an infringement of the rightful owner's rights.

TERMS OF USE
Reproduction, in whole or in part, of the texts, drawings, images, and any other content in this catalog is prohibited without the express authorization of Mc Slide S.r.l.

COLOR VARIATIONS
The images and illustrations in this catalog may not accurately reflect the actual colors of the materials. Such differences may arise from:
- photo conversion and printing processes
- the intrinsic characteristics of the materials
- variables in production processes Mc Slide S.r.l. reserves the right to make technical, functional, quality, and aesthetic changes to its products without notice, as part of its commitment to continuous improvement.

Mc Slide is built around three strategic locations, each dedicated to a specific stage of the production and development of our sliding systems.

Rimini site
Production center for the Interior Line and home to our executive and technical offices. This is where our sliding systems for indoor spaces are born, engineered with precision and attention to detail.



Mc Slide S.r.l.
Via Achille Grandi, 29 - 47922
Rimini (RN) - ITALY
VAT No. 03886680408 - SDI: M5UXCR1
T. +39 0541 734619 www.mcslide.it -
info@mcslide.it

San Giovanni in Marignano site
Plant dedicated to Exterior Line production, where we manufacture systems for panoramic glass walls and all-glass solutions for outdoor residential and commercial spaces.



Mc Slide S.r.l.
Via degli Ippocastani, 388 - 47842
San Giovanni in Marignano
Rimini (RN) - ITALY
VAT No. 03886680408 - SDI: M5UXCR1
T. +39 0541 734619 www.mcslide.it -
info@mcslide.it




MC
MC
FLIDE



“A paper airplane teaches us that flight takes two things: a solid structure and the courage to take off. The same is true for companies.”

TO GROW A COMPANY TAKES PLANNING, BALANCE AND THE RIGHT ENERGY. ONCE AIRBORNE, EVERY CURRENT IS AN OPPORTUNITY TO GO FURTHER. IT ISN’T MAGIC — IT’S STRATEGY AND PASSION.”

MC
SLIDE

OUR WAY TO INNOVATION

